EasyPact EXE

Medium Voltage Distribution

Catalog 2021

Vacuum circuit breaker up to 17.5 kV
Fixed and withdrawable versions

EasyPactExe.se.com

Life Is On | Schneider Electric

General contents

Overview 6

Range description 26

Function and modules description 36

Product references 48

L-Frame cradle 64

Your needs	EasyPact EXE answers
Safety	**Designed for greater safety**, for both the operator and end user applications.
Simply to use	**Simple to use**, with fast delivery, easy online ordering, and personalized technical support.
Flexibility	**Flexible**, with modular kits offering more options for later customization than other circuits breakers in its class.

Overview

Overview

Field of applications	8
Designed for greater safety	10
Simple to use	12
Flexible	15
EcoStruxure™ ready solutions	16
A comprehensive solution	17
Schneider Electric Services	21
Quality - Environment	24

Field of applications

EasyPact EXE is a range of vacuum circuit breakers designed to connect building infrastructure (heating, ventilation, lighting, etc.) and industrial plant processes (MV motors, MV/LV substations, furnaces, etc.) to the power grid, and to protect people and equipment.

Description

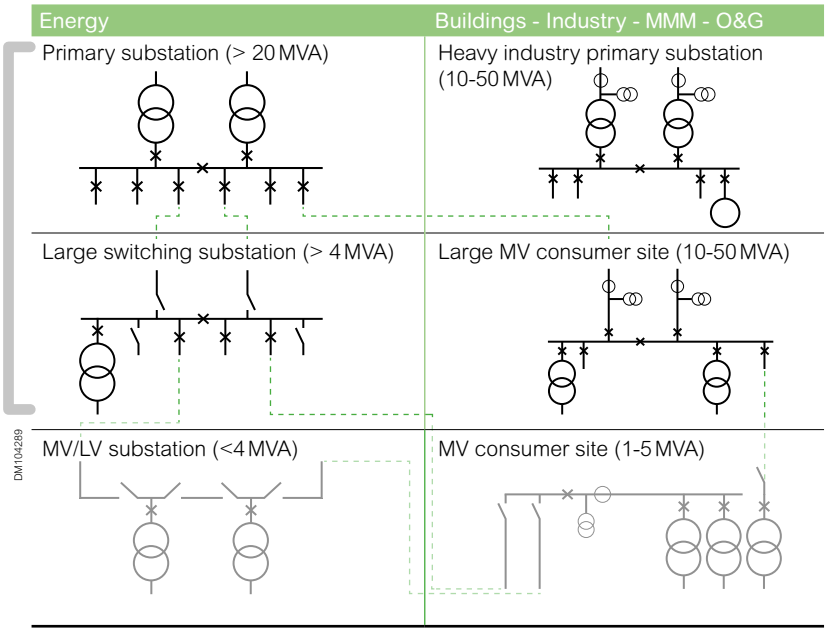

EasyPact EXE is available in 2 versions: fixed and withdrawable.

PM106400

The fixed version comprises:

- 3 poles equipped with vacuum interrupters for medium voltage systems up to 17.5 kV / 31.5 kA / 2 500 A
- 6 primary contacts to connect the vacuum interrupters to the switchgear busbars section on one side and to cables or to another busbars section on the other side
- A spring-operated mechanism to give the device an opening and closing speed that is independent of the operator
- A set of terminal blocks to connect the circuit breaker auxiliaries to the switchgear control circuit and protection relay
- A front cover with pushbuttons, status indicators, and a lever to charge the closing spring in case of lack of auxiliary supply voltage

PM106461

The withdrawable version comprises:

- 6 arms mounted on the switching device to adapt the position of the primary contacts to engage into the switchgear
- A racking trolley to move the circuit breaker from the disconnected position to the service position and vice versa, either by rotating a lever on the front of the switchgear with the door closed, or remotely by activating an electrical order from the control room
- A removable LV plug with flexible ducting to maintain the circuit breaker auxiliary circuits connected to the switchgear control circuit and the protection relay in any circuit breaker position: disconnected or service

Field of applications

PM105370

PM105359

PM105369

PM105368

Applications

Infrastructure

- Airports
- Hospitals

Large commercial buildings

- High rise buldings
- Mails
- Shopping centres,
- Office buildings

Industrial plants

- Batch processes plants
- Cement plants
- Food and beverage plants

Power grid

- Distribution substations

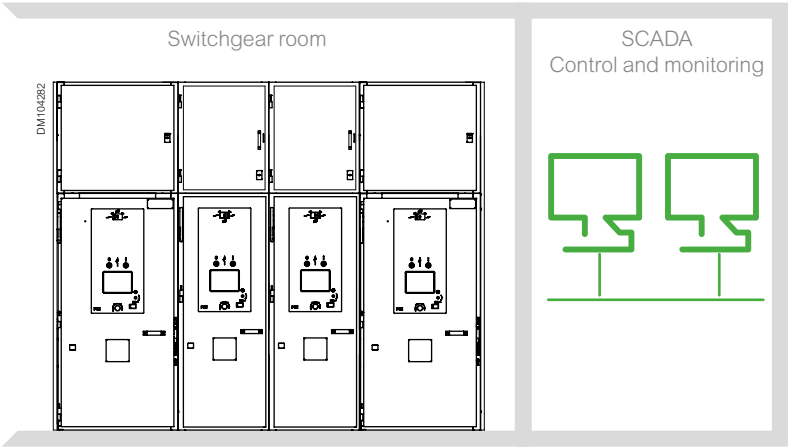

EasyPact EXE circuit breaker enables the Panel Builder to design switchgear solutions with enhanced safety features, which can be fully controlled from a separate room.

Designed for greater safety

The IEC [1] standard stipulates:
"Select equipment that minimizes the risks to personnel from improper operation (for example, fast acting ground switches on lines, motor operators to allow remote operation)".

The right choice of components such as racking trolley, vacuum interrupter and operating mechanism, is crucial to fulfil this IEC recommendation.

[1] Chapter 12.3 of the IEC 62271-1 edition 2017

PE56600

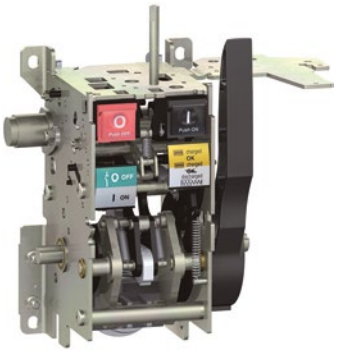

Operating mechanism

Operating mechanism

The operating mechanism gives the device an opening and closing speed that is independent of the operator whether the order is electrical or manual.
It carries out reclosing cycles and it is automatically recharged by a geared motor after each closing.

The opening order has priority over closing order. In the event of permanent and simultaneous opening and closing orders, it has to maintain the circuit breaker in the "open" position. Once the opening order has been canceled, the closing order has to be interrupted then reactivated to enable closing of the circuit breaker.

The EasyPact EXE operating mechanism comprises:

- A mechanism that stores in the springs the energy required to open, close, and open the device
- A mechanical antipumping system to prevent reclosing after a close-open operation as long as the closing order is maintained
- A lever to manually charge the closing spring when the auxiliary power supply is not available
- Two pushbuttons on the front for manual opening and closing orders, that can be equipped with keylocking and padlocking accessories
- A device indicating the closing spring "charged" and "discharged" status by means of a mechanical indicator on the front
- A mechanical position indicator on the front to indicate whether the device is open or closed
- A gear motor (MCH) for automatically charging the closing spring.
  The gear motor is equipped as standard with an electrical contact to signal the "charged" position of the mechanism (springs charged)
- An electrical closing release for remote closing order (XF)
- An electrical opening release for remote opening order (MX1) and optional, a second electrical opening release that can be either shunt opening type (MX2) or undervoltage type (MN)
- A ready to close contact (PF) indicating that the circuit breaker fulfills the following conditions:
  - the circuit-breaker contacts are opened
  - the closing spring is charged
  - the opening push button is not activated by a keylock device or manually
  - the opening shunt release is not energized
  - the undervoltage release, if present, is energized
- One, two or three blocks of 4 auxiliary contacts for remote indication of the open or closed position of the circuit breaker
- An operation counter (CDM)

The materials used to manufacture operating mechanism sub-assemblies have been selected and designed to operate 10 000 cycles with preventive maintenance under the conditions defined by the IEC standard.

Designed for greater safety

PE55694

Vacuum interrupter

Vacuum interrupter

The vacuum interrupter has to convey and break the rated normal current, and has to convey and break the rated short-circuit current a number of times, in line with the manufacturer's specification.

It consists of two electrical contacts, one fixed and the other mobile inside a sealed enclosure. The level of pressure inside the enclosure has to be very low (less than 10-1 Pa) to reach the value specified for the dielectric withstand between the open contacts. In order to maintain the pressure level inside the interrupter throughout its expected operating life, the enclosure has to be perfectly sealed, and the various components have to be fully degassed. This is achieved by:

- Choosing materials that are specifically selected for this application (metals and ceramics)
- Choosing an appropriate assembly process (vacuum, high temperature brazing)
- The use of a "getter" material to absorb the residual gas inside the enclosure.

EasyPact EXE vacuum interrupters are designed to operate 10 000 cycles, under the conditions defined by the IEC standard.

PM106402

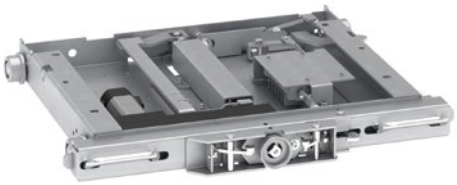

Racking device

Racking device

The racking device moves the circuit breaker from the disconnected position to the service position and vice versa. The racking operation can be done either manually by rotating a lever on the front of the switchgear with the door closed, or remotely by activating an electrical order. Remote operation is recommended as it allows convenient operation from beyond any arc flash boundary.

EasyPact EXE racking device has a robust interlocking system with the switchgear door, the circuit-breaker and the earthing switch. It can be equipped with an electric motor for remote racking from the control room.

The materials used to manufacture EasyPact EXE racking trolley sub-assemblies have been selected and designed to operate 2 000 cycles under the conditions defined by the IEC standard.

Simple to use

Customer support

A QR code on the front of the EasyPact EXE enables Specifier, Panelbuilders and End-Users to access easily to Information and support.

PM106407

PM106408

PM106465

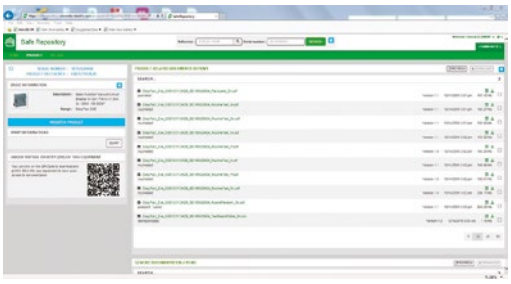

PM105387

PM105365

EasyPact EXE on SE.com web page

Specifier, Panelbuilders and End-Users have access to:

- Catalogue and Brochure
- Certificate of Conformity for each Basic Function
- 3D models
- User Guide, Receipt Guide
- Instruction sheet

EasyPact EXE on Safe Repository

https://saferepository.schneider-electric.com/login

Panelbuilders and End-Users owner of EasyPact EXE device have access, according to Reference number and Serial number to:

- Routine test
- Nameplate information
- Assembly sheet with the list of Kits assembled on the Device
- Certificate of dispatch of the Device from Schneider Electric
- Maintenance information

Customer Care Center

Specifiers, Panelbuilders and End-Users have access to on line Customer Care Center to request information on EasyPact EXE.Schneider Electric has set up call centers and e-mail contacts in more than 190 countries to provide a rapid response to customer inquiries.

Personnel in the country using EasyPact EXE are trained to provide qualified answers to customer questions.

Technical and commercial support

Schneider Electric offers extensive technical and commercial support to Panel Builders, including expert advice on

- How to customize EasyPact EXE
- How to integrate EasyPact EXE in switchgear
- How to prepare switchgear for testing in the laboratory
- How to analyze the results from type tests to improve switchgear design
- How to verify the technical performance of EasyPact EXE in assembled switchgear

Training documents and other support material can be provided to Panel Buiders.

Please contact your Schneider Electric sales representative for more information.

Simple to use

PM105367

Robust design controls

EasyPact EXE has been designed in accordance with rigorous verification checks that include:

- A product design quality system certified ISO 9001 compliant by AFNOR (an independent certification organization based in France)
- Recognized simulation software to verify the dielectric, thermal, and electrodynamic behavior of the circuit breaker components in various switchgear models
- Extensive type tests in laboratories accredited according to ISO/IEC standard 17025

DM104281

Proven compliance with IEC standard

Every type of EasyPact EXE circuit breaker has been subjected to the following type tests, as defined by the IEC standard 62271-100: 2017-06

- Dielectric tests
- Measurement of the resistance of the main circuit
- Temperature rise tests
- Short-time withstand current and peak withstand current tests
- Additional tests on auxiliary and control circuits
- Mechanical operating test at ambient temperature
- Short-circuit making and breaking tests
- Extended mechanical endurance tests for M2 class
- Electrical endurance tests for E2 class
- Capacitive current switching tests:
  - Line-charging current switching test
  - Cable-charging current switching test
  - Single capacitor bank switching tests
- Out-of-phase making and current switching tests

All type tests are witnessed by a third party, ASEFA, which has the authority to issue a certificate of conformity according to ISO/IEC standard 17065.

The certificates of conformity issued by ASEFA indicate the following on the front page:

- The apparatus type defined as fixed or withdrawable and the phase distance
- The circuit breaker reference defined by the main rated characteristics: rated voltage, rated short-circuit breaking current, rated normal current
- The list of relevant type test reports used by ASEFA to certify EasyPact EXE conformity with the IEC standard

PM106410

asefa

CERTIFELEC

Certificat de conformité / *Certificate of conformity*
N° 01-42-327-02

Délivré à / *Issued to*: **Schneider Electric Industries SAS**
89, Boulevard Franklin Roosevelt
92500 RUEIL MALMAISON - FRANCE

Pour le produit / *For the product*: Disjoncteur haute tension / *High-voltage circuit-breaker*
Référence(s) / *Reference(s)*: EXE122006A1B version fixe / fixed version
EasyPact EXE 12kV 20kA 630A (145mm distance d'entrephase / 145mm phase distance)
Selon dossier d'identification / *According to Identification File*: NVE6726500 Rev 01

Marque commerciale / *Trademark*: Schneider Electric

Fabricant / *Manufacturer*: Schneider Electric Industries SAS

Site de fabrication / *Place of manufacture*: Schneider Electric, SEA plant - Aubenas - FRANCE

Informations complémentaires / *Additional information*: sans objet / *none*

Document(s) de référence / *Reference document(s)*:
IEC 62271-100 Ed 2.1 (2012-09): liste des essais en Annexe 1 / *list of tests in Annex 1*

Caractéristiques certifiées / *Certified ratings*: voir Annexe 2 / *refer to Annex 2*

Document(s) pris en compte (s) / *Relevant document(s)*:
Rapport(s) d'essai / *Test report(s)*: voir Annexe 1 / *refer to Annex 1*
(émis par F11 en tant que laboratoire homologue ASEFA, et DNV-GL/KEMA / *issued by F11 as ASEFA approved laboratory, and DNV-GL/KEMA*)

Ce certificat ne s'applique qu'à l'échantillon soumis à l'essai de type / *This certificate applies only to the sample submitted to the type test.*
Ce certificat a été émis selon les dispositions des Règles de certification ASEFA en vigueur / *This certificate has been issued under the provisions of the current ASEFA Certification Rules.*

Fontenay-aux-Roses,
Le / *On* : 08/07/2016

Le Président de l'ASEFA / *The Chairman of ASEFA,*

Marie-Elisabeth D'ORNANO po. Vincent SCHUHL

La reproduction de ce certificat de conformité n'est autorisée que sous la forme de fac-similé photographique intégral / *This certificate of conformity shall only be reproduced in the form of a complete photographic fac-simile.*

33, av du général Leclerc
92260 Fontenay-aux-Roses – France
tél. 01 40 95 61 02
e-mail : contact@asefa-cert.com

Maquette Certificat ASEFA HT, version K / *Form of ASEFA HT Certificate, version K*

cofrac
Accréditation n° 5-0037
Portée disponible sur / *Scope available on*
www.cofrac.fr

Simple to use

PM105366

Robust manufacturing controls

EasyPact EXE is manufactured in factories certified compliant to ISO 9001 for product quality by third party.

The following quality controls are implemented to ensure that each product delivered to Panel Builder has the same performance as the unit type tested:

- Regular inspection of critical components and processes using a coordinate measuring machine
- Regular measure of residual gas inside the vacuum interrupter by mass spectrometry
- Regular mechanical tests on circuit breaker samples
- Routine tests on all products:
  - Dielectric tests on the main circuit
  - Tests on auxiliary and control circuit
  - Measurement of the resistance of the main circuit
  - Design and visual checks
  - Mechanical operating tests
  - Tightness test of each individual vacuum interrupter

Flexible

Schneider Electric delivers products with assembly instruction sheets available on website at www.schneider-electric.com.

The Panel Builder customizes the circuit breaker by following these instructions. This enables the Panel Builder to be very flexible when ordering products references.

Customization flexibility

Simple online ordering

With MySE, the Schneider Electric online application, registered Panel Builders can access order management and logistics information securely and immediately (24/7).

This app provides the real-time price and lead time for any EasyPact EXE reference and offers additional benefits such as online ordering, delivery status follow-up, invoice reprinting, etc.

Registered Panel Builders can also access Power Build Medium Voltage, EasyPact EXE product selector, which allows to easily generate the list of product references needed for a given switchgear configuration, and to upload it into MySE and Panelbuilder ERP.

On-the-shelf availability

EasyPact EXE benefits from Schneider Electric's well-established supply chain with local distribution centers that can deliver high demand products in few days (5 days ex-works usually).

Broad range of dimensions

The wide range of dimensions available in this catalog enables Panel Builders to build compact cubicles starting at 600 mm/800 mm wide for ratings up to 1 250 A and 800 mm/900 mm wide for ratings up to 2 500 A. In addition, the availability of versions with phase distances of 150 mm, 210 mm, and 275 mm means that circuit breakers of various brands can be replaced in existing cubicles with minor modifications to the cubicle architecture.

Cost saving

The features listed above help to reduce costs and give Panel Builders more time to do what really matters: Take care of customers.

EcoStruxure™ ready solutions

Scalability with fit-for-purpose solutions

For customers who would like a digital approach, we propose an efficient and cost-effective alternative to breaker, cable and busbar thermo scanning using temperature wireless sensors and a smart phone app.

DM107694

TH110 thermal sensor

Easergy TH110

Wireless Thermal Sensor

Help ensure continuous thermal monitoring to detect potential loose connections of:

- Cable connections
- Busbar connections
- Circuit breaker arms

Battery-less sensor

DM107695

Supported by our App to view and share temperature information

Local, on demand connectivity enables:

- Nearby thermal monitoring on your smartphone up to 10 m from your switchgear
- Fast access to documentation via QR code

Enhanced for modern MV distribution

The connected switchgear is the perfect choice for intelligent distribution, helping to secure both new and existing operations. Thanks to its innovative tools and IoT capabilities, your switchgear can start to become future-ready.

DM107696

Easergy Thermal Connect app

QR Code

NFC Tag

PM108893

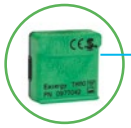

Thermal Monitoring

DM105004

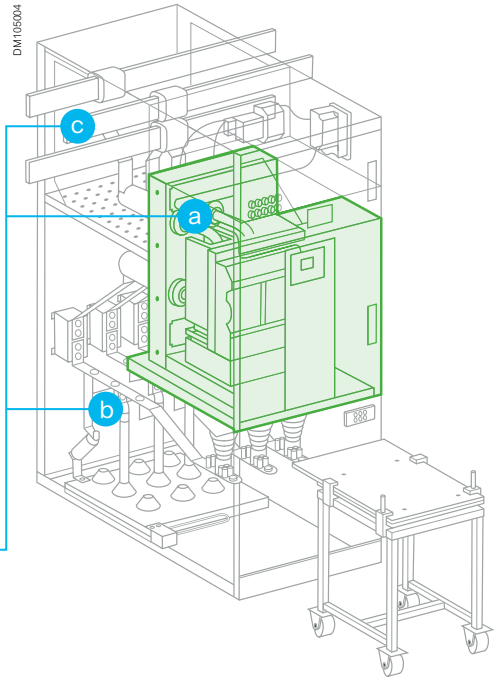

A comprehensive solution

The EasyPact family: Build your complete MV & LV distribution network

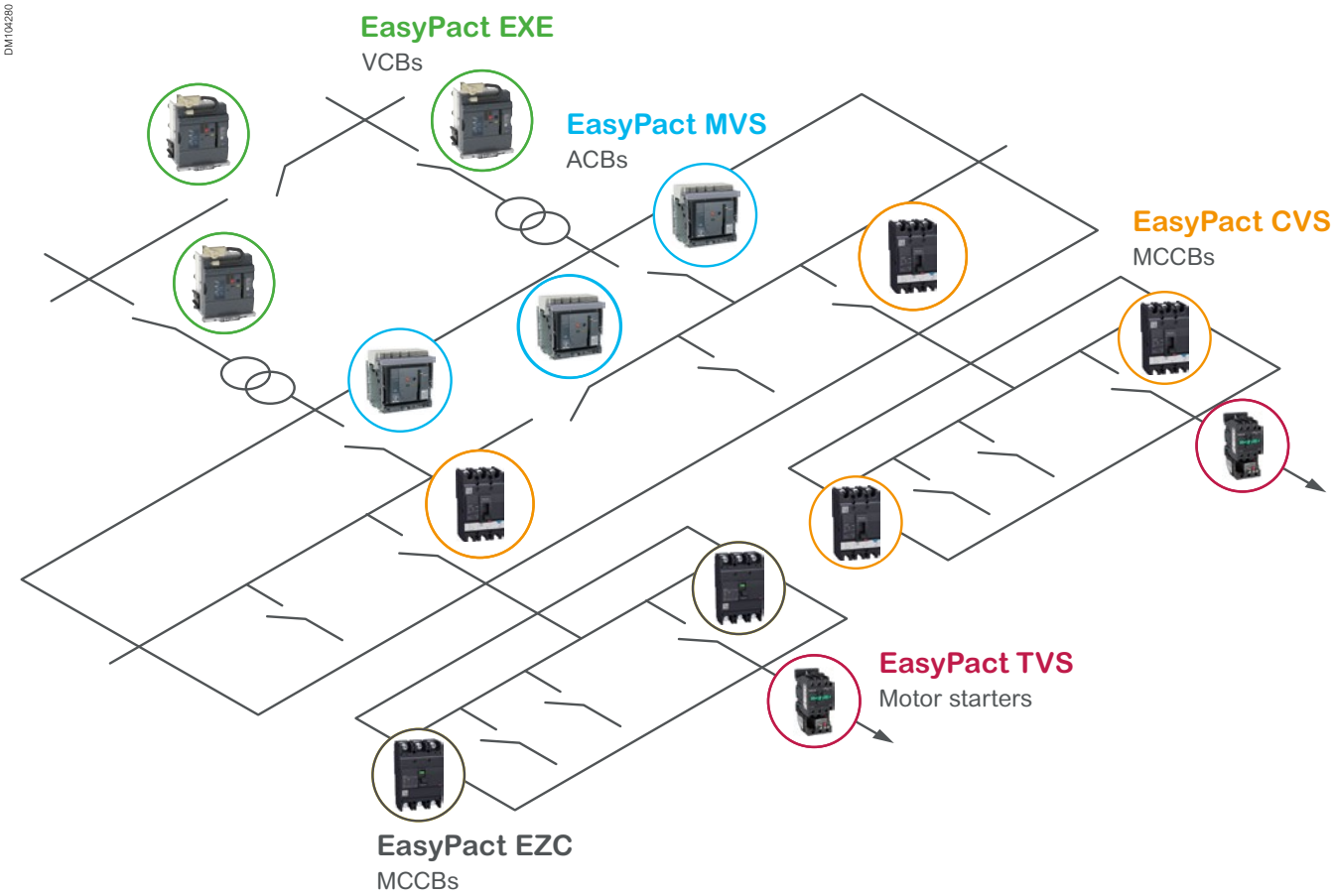

Medium voltage	
General specification	EasyPact EXE
Rated voltage (kV)	7,2 / 12 - 17,5
Rated lightning impulse withstand (kV)	60 / 75 - 95
Rated short circuit breaking current (kA)	20 - 25 - 31.5
Rated duration of short circuit (s)	3
Rated normal current (A)	630 - 800 - 1 250 1 600 - 2 000 - 2 500
Target application	Building, industry, and power grid

Low voltage				
General specification	EasyPact MVS	EasyPact CVS	EasyPact TVS	EasyPact EZC
Rated insulation voltage (V) Ui	1 000	690	690	690
Impulse withstand voltage (kV) Uimp	12	8	6	6
Rated operational voltage (V a.c. 50/60 Hz) Ue	690	440	690	550
Target application	Buildings and industry	Commercial and industrial buildings	Buildings and simple industry	Commercial and residential buildings

A comprehensive solution

The EasyPact family: Build your complete MV & LV distribution network

SEA10FD0180911EN-01

EasyPact MVS

The easy choice for reliable performance

Application

Power circuit breakers, ideal for the "head end" of electrical distribution panels in medium to large office buildings and factories.

Performance

Reliable performance for the entire range with a rating:

- Ics = Icu = Icw (1 s) = 50 and 65 kA at 440 V

Flexibility

Covers a broader range of applications than competing offers:

- Suitable for applications up to 690 V
- Operates across a wide temperature range before requiring derating
- Compatible with copper and aluminium connections
- Includes a complete range of switch disconnectors

PB106445-05_3P_QRCODE

EasyPact CVS

The easy choice for quality and value

Application

Moulded-case circuit breakers, an excellent choice for feeders and sub-feeders in small and medium-sized industrial and commercial buildings.

Performance

- Ics = 100% Icu
- Suitable for reverse feeding applications
- Adjustable thermal protection
- Optional insulation fault protection
- IEC 60947-2 isolation and highly visible contact position ensures the downstream circuit is safe.

Flexibility

- Compatible with copper and aluminium connections
- Includes a complete range of switch disconnectors

A comprehensive solution

The EasyPact family: Build your complete MV & LV distribution network

CPB100604-01_QR

EasyPact EZC

The easy choice for simplicity

Application

Moulded-case circuit breakers, ideal for feeders and sub-feeders in residential, commercial, and marine applications.

Performance

Three sizes, fixed settings, and an attractive price point make this range well suited for simple protection in small and medium-sized buildings.

Flexibility

Multiple connection options:

- Fixed front mounting, plug-in mounting, front connections, bare cables connected through cable lugs, screwed inside the breaker
- Unique "fish bone" connection, space saving especially for marine applications

PM105363

CPB100405-45

CPB100404-38

PM105364

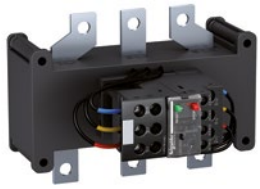

CPB100402-20

EasyPact TVS

The easy choice for simplicity and flexibility

Application

Motor starter solutions, ideal for HVAC, textile, material handling, and manufacturing environments.

Performance

Optimized range of features, performance, and quality at their price point.

Flexibility

Complete range of products covers wide range of applications:

- Basic motor protection circuit breaker
- Contactors
- Thermal overload relays
- Control relays

A comprehensive solution

Schneider Electric product portfolios include a wide choice of multi-function relays to be used together with EasyPact EXE to build a consistent solution for protection, control, and monitoring.

PM106336

Easergy P3

PE60300

Sepam range

PM102898

MiCOM range

PE57123

PM105362

PowerLogic range

PM106411

VAMP 125

Protection and control relays

Protection and control relays provide all the necessary functions:

- Effective fault diagnosis and protection planning
- Accurate measurements and detailed diagnosis
- Integral equipment control
- Local or remote indication and operation

Easergy P3

The Easergy P3 range of relays is suitable for all common applications as well as some specific applications including advanced metering functions. Easergy P3 relays are to protect applications, from overhead line feeders and substations to power plants and industrial power systems.

Sepam

Sepam series 20, series 40, series 60 and series 80 protection relays take full advantage of Schneider Electric's experience in electrical network protection.

Sepam allows easy upgrading: addition of communication, digital I/O's, analog output, or temperature acquisition systems can be added due to its modular design.

MiCOM

MiCOM protection provides the user with a choice of optimised solutions for specific protection requirements within the distribution network.

The MiCOM relay series offers comprehensive protective function solutions for all power supply systems as well as for various functional and hardware project stages.

PowerMeter and circuit monitors

The PowerLogic PowerMeter replaces a whole set of basic analogue meters.

This cost-effective, high-performance meter provides a full range of accurate true-rms metering values.

The PowerLogic series 3000/4000 Circuit Monitor is designed for critical power users and large energy consumers, to provide the information needed to confidently enter the evolving world of deregulation.

It can be adapted to meter almost any time-of-use or real-time rate.

VAMP arc fault protection relay

The VAMP arc protection unit detects an arc flash in an installation and trips the feeding breaker. The unique arc fault protection functionality enhances the safety of both people and property and has made VAMP a leading brand in arc protection relays worldwide.

Schneider Electric services

Peace of mind throughout your installation life cycle

How can you cut costs and improve performance at the same time?

When it comes to your electrical distribution infrastructure, the answer is straightforward: get professional expertise.

Life Cycle Services

DB408843

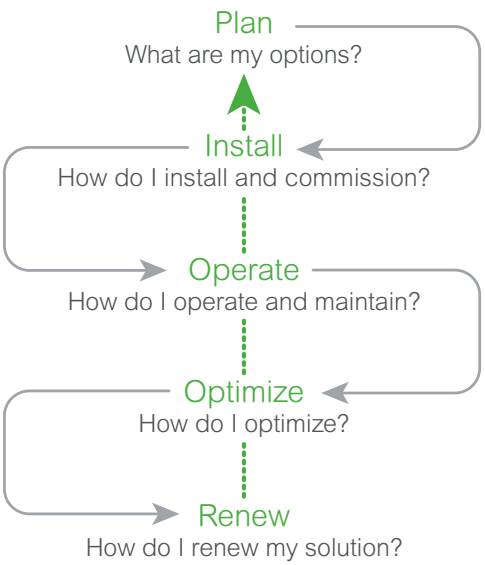

When it comes to your electrical distribution installation, we secure help you:

- Increase productivity and reliability
- Mitigate risk and limit downtime
- Keep equipment up to date and extend lifespan
- Cut costs and increase savings
- Improve your return on investment

CONTACT US!

www.schneider-electric.com/b2b/en/services/

Plan

Schneider Electric helps you plan the full design and execution of your solution, looking at how to secure your process and optimize your time:

- **Technical feasibility studies:** Design a solution in your environment
- **Preliminary design:** Accelerate turnaround time to reach a final solution design

Install

Schneider Electric will help you to install efficient, reliable and secured solutions based on your plans.

- **Project management:** Complete your projects on time and within budget
- **Commissioning:** Ensure your actual performance matches the design, through on-site testing and commissioning, and tools and procedures

Operate

Schneider Electric helps you maximize your installation uptime and control your capital expenditure through its service offer.

- **Asset operation solutions:** Provide the information you need to enhance installation performance, and optimize asset maintenance and investment
- **Advantage service plans:** Customize service plans that cover preventive, predictive and corrective maintenance
- **On-site maintenance services:** Deliver extensive knowledge and experience in electrical distribution maintenance
- **Spare parts management:** Ensure spare parts availability and an optimized maintenance budget of your spare parts
- **Technical training:** Build the necessary skills and competencies to properly and efficiently operate your installations

Optimize

Schneider Electric can make recommendations for improved availability, reliability and quality.

- **MP4 electrical assessment of customer installations:** Define an improvement and risk management program

Renew

Schneider Electric extends the life of your system while providing upgrades.

We can offer an end of life processing of old electrical equipment.

- **ECOFIT™:** Keep up to date and improve the performance of your electrical installations (LV, MV, protection relays, etc.)
- **MV product end of life:** Recycle and recover outdated equipment with end of life services

Schneider Electric Services

Peace of mind throughout your installation life cycle

Frequency of maintenance intervention

Schneider Electric recommends implementing a schedule for maintenance activities to extend electrical distribution equipment performance over time.

Frequencies under normal/healthy operation (minor equipment criticality and optimal environmental conditions) can be generally defined as described in the table below:

Maintenance	Min. freq.(1)	Who		
		Manufacturer	Certified Partner	End user
Exclusive	every 5 years	●		
Advanced	every 2 years	●	●	
Light	every 1 year	●	●	●

(1) Recommended minimum frequency under normal operating conditions (minor equipment criticality and favourable environmental conditions).

However, for Eclusive Maintenance, the frequency could be increased according to Electrical-Room Environment conditions and Equipment Criticality, as described in the table below:

Electrical-Room **ENVIRONMENTAL** conditions	Equipment **CRITICALITY**		
	Minor	**Major**	**Critical**
Favourable	5	5	4
Normal	5	4	3
Severe	4	3	2
	Recommended **PERIODICITY** in YEARS		

The Electrical-Room ENVIRONMENTAL conditions (favorable,normal, severe) (i.e.corrosive, naval, offshore) are following recommendations of Manufacturer's services.

Equipment Criticality is the combination of device stress level and its impact on the reliability of the installation; the level of criticality are (minor, major, critical).

For more details about how to categorize your Electrical-Room Environment conditions and Equipment Criticality contact your Sales representative.

Spare parts

Under Schneider Electric's spare parts management policy, EasyPact EXE parts will be available for 10 years after end of commercialization of the product.

Services Contract

A service contract for the switchgear room can be offered by the local Schneider service team with packages such as predictive maintenance, preventive maintenance, 24/7 hotline, emergency on-site intervention, and emergency spare part delivery. The availability of the service plan offers varies in different countries.

Schneider Electric Services

The main advantages of modernization solutions using EasyPact EXE

PM105360

Asset optimization

The life of existing electrical equipment is extended thereby increasing the return on investment.

Reduced production stoppage

A retrofit full panel replacement can take anywhere from only a few minutes up to an hour. When considering whether to maintain equipment or replace it, facility managers should take into account the initial capital cost, along with potential disruption to the facility's processes and workflow during the course of changing out the equipment. Unless process loads can be rerouted temporarily during the demolition of old equipment and installation of the new switchgear, the cost of lost production can be substantial.

Improved cash flow

A full retrofit of an industrial site could be spread over several years. Often, when new equipment is purchased, the on-site physical plant also needs to be modified to accommodate the new equipment, which adds to the cost.

Reduced risk

Installing new switchgear involves more cabling (which requires that existing cabling above and below the equipment be moved). In some cases, cabling may need to be replaced or spliced, which introduces a higher element of risk.

Peace of mind

Pre-tested solutions from established manufacturers provide a high degree confidence in a retrofit solution. Schneider Electric have managed thousands of switchgear retrofit projects and have an extensive library of lessons learned. Qualified personnel and up-to-date tools reduce the risk of accidents and delays. Accompanying safety improvements and updated warranties also contribute to overall power network peace of mind.

Digitization

Retrofit solutions also open the door to enhanced equipment connectivity. This then allows access to more detailed levels of energy management date, which enables better monitoring of energy consumption.

Lower environmental impact

Since a retrofit solution replaces only a portion of the existing electrical equipment, fewer waste materials need to be processed than if a complete replacement were to occur.

Quality - Environment

PM105359

PM105396

PM105397

Quality assurance

Schneider Electric incorporates a functional organization into each of its business units and manufacturing plants, the purpose of which is to provide a means of checking quality and monitoring compliance with standards.

This procedure is:

- Uniform throughout all departments
- Recognized by many customers and approved organizations

But above all, its strict application has allowed us to obtain the recognition of AFNOR certification, an independant organisation delivering AFAQ quality mark.

The quality system for the design and manufacture of circuit breakers has been certified in conformity with the requirements of the ISO 9001:2015 quality assurance model.

Environmental performance

Schneider Electric is committed to a long-term environmental approach.
All necessary measures have been taken in conjunction with our services, suppliers, and subcontractors so that the materials used in the composition of the equipment comply with acceptable content levels of regulated substances as defined by regulations and directives. The production site is certified to ISO 14001.

In addition, the materials used in EasyPact EXE, insulators and conductors, are identified and can easily be separated and recycled, as detailed in the "Product Environment Profile" file. An end-of-service-life manual details procedures for dismantling and processing components.

Green Premium™

An industry leading portfolio of offers delivering sustainable value

Green Premium™

More than 75% of our product sales offer superior transparency on the material content, regulatory information and environmental impact of our products:

- RoHS compliance
- REACh substance information
- Industry leading # of PEP's*
- Circularity instructions

The Green Premium program stands for our commitment to deliver customer valued sustainable performance. It has been upgraded with recognized environmental claims and extended to cover all offers including Products, Services and Solutions.

CO_2 and P&L impact through… Resource Performance

Green Premium brings improved resource efficiency throughout an asset's lifecycle. This includes efficient use of energy and natural resources, along with the minimization of CO_2 emissions.

Cost of ownership optimization through… Circular Performance

We're helping our customers optimize the total cost of ownership of their assets. To do this, we provide IoT-enabled solutions, as well as upgrade, repair, retrofit, and remanufacture services.

Peace of mind through… Well-being Performance

Green Premium products are RoHS and REACh compliant. We're going beyond regulatory compliance with step-by-step substitution of certain materials and substances from our products.

Improved sales through… Differentiation

Green Premium delivers strong value propositions through third-party labels and services. By collaborating with third-party organizations we can support our customers in meeting their sustainability goals such as green building certifications.

Discover what we mean by green
Check your products!

*PEP: Product Environmental Profile (i.e. Environmental Product Declaration)

Range description

Range description

Fixed Circuit Breaker (CB)	**28**
Main characterisitcs	28
Dimensions	29
Withdrawable Circuit Breaker (CB) Tulip Contact	**30**
Main characterisitcs	30
Dimensions	31
Withdrawable Disconnecting Device (DD) Tulip Contact	**32**
Main characterisitcs	32
Dimensions	33
General Characteristics	**34**
Service and storage conditions	34
Electrical characteristics (CB)	35

Fixed Circuit Breaker (CB)

Main characteristics

PM106400

PM106412

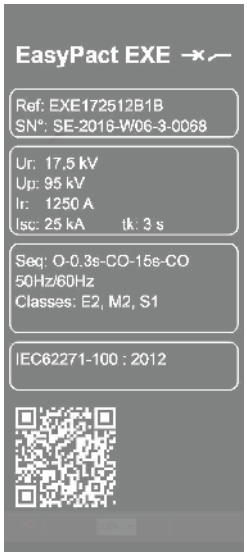

According to IEC 62271-100: 2012

Designation			Dimensions and electrical characteristics								
Phase distance (mm)				**145**	**150**	**185**	**185**	**210**	**210**	**240**	**275**
Rated voltage	Ur	kV	12	•	•	•	•	•	•	•	•
			17.5	•	•	•	•	•	•	•	•
Rated frequency	fr	Hz	50/60	•	•	•	•	•	•	•	•
Rated short duration power frequency withstand voltage (1)	Ud	kV	28	•	•	•	•	•	•	•	•
			38	•	•	•	•	•	•	•	•
Rated lightning impulse withstand voltage	Up	kV	75	•	•	•	•	•	•	•	•
			95	•	•	•	•	•	•	•	•
Rated short-circuit breaking current	Isc	kA	20	•	•	•		•			
			25	•	•	•	•	•	•		
			31.5	•	•	•	•	•	•	•	•
Rated duration of short-circuit	tk	s	3	•	•	•	•	•	•	•	•
Rated normal current	Ir	A	630	•	•	•		•			
			800	•	•	•		•			
			1 250	•	•	•		•			
			1 600				•		•		
			2 000				•		•		
			2 500						•	•	•

Additional characteristics according to IEC 62271-100 are listed in the common characteristics section.
(1) Contact us for 42 kV - 5 min.©

The EasyPact EXE fixed version is equipped with threaded copper connection terminals at the top and bottom.

The shape and dimensions of conductors should be determined by the Panel Builder according to the dielectric withstand and temperature rise characteristics of the whole connection system.

Field deflectors on lower connection up to 1250 A may be required to achieve 95 kV BIL dielectric withstand depending on the switchgear architecture.

Please contact your sales representative to receive EasyPact EXE integration guide with more information.

PM105377

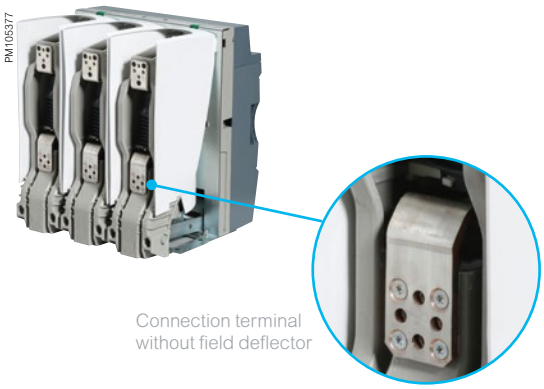

Connection terminal without field deflector

PM105376

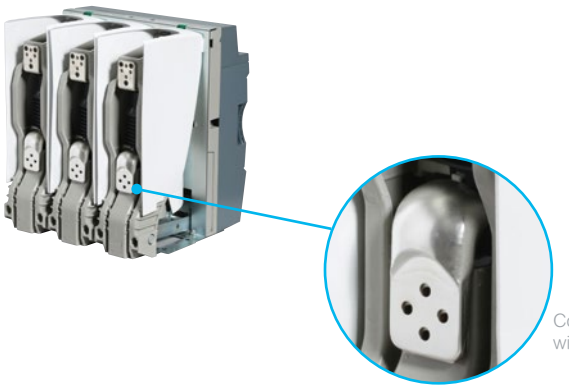

Connection terminal with field deflector

Fixed Circuit Breaker (CB)

Dimensions

Phase distance 145 mm

Up to 17.5 kV / 31.5 kA / 1 250 A

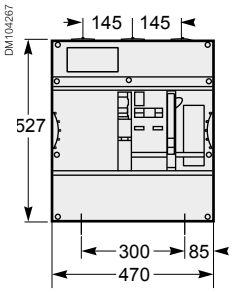

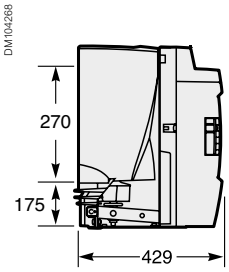

Phase distance 150 mm

Up to 17.5 kV / 31.5 kA / 1 250 A

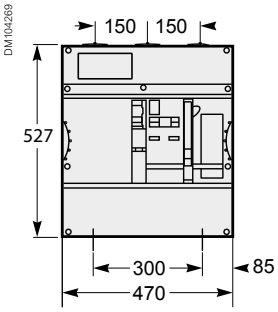

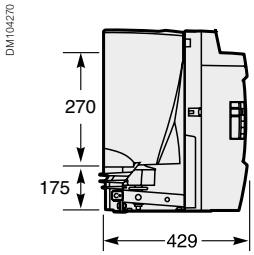

Phase distance 185 mm

Up to 17.5 kV / 31.5 kA / 2 000 A

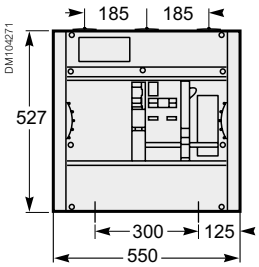

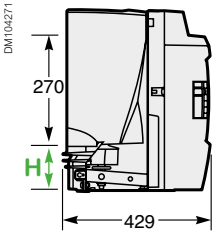

H
- 175 mm up to 1 250 A
- 158 mm for 1 600 A and 2 000 A

Phase distance 210 mm

Up to 17.5 kV / 31.5 kA / 2 500 A

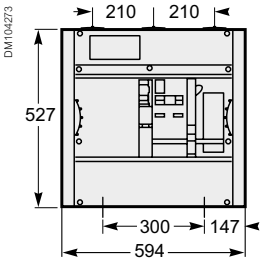

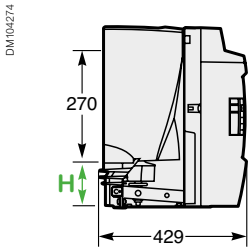

H
- 175 mm up to 1 250 A
- 158 mm for 1 600 A, 2 000 A and 2 500 A

Phase distance 240 mm

Up to 17.5 kV / 31.5 kA / 2 500 A

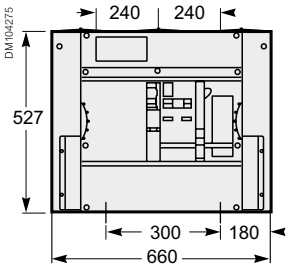

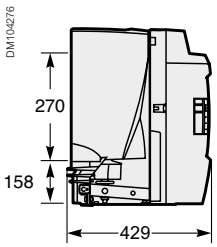

Phase distance 275 mm

Up to 17.5 kV / 31.5 kA / 2 500 A

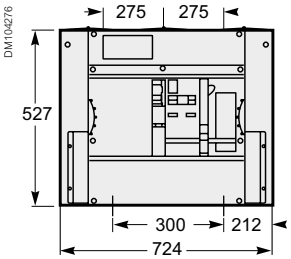

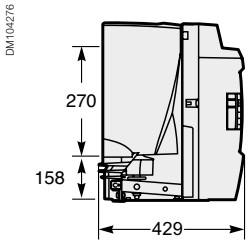

PM106414

The full set of 3D models is available at:
www.schneider-electric.com/en/product-range-download/63374-easypact-exe#tabs-top

Withdrawable Circuit Breaker (CB) - Tulip Contact

Main characteristics

PM106461

PM106412

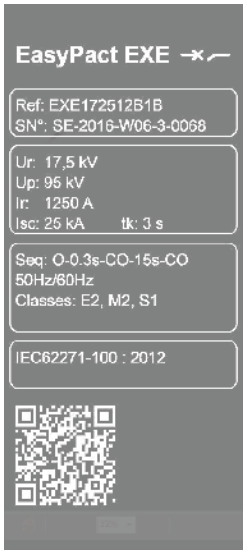

According to IEC 62271-100: 2012

Designation			Dimensions and electrical characteristics				
Phase distance (mm)				**150**	**210**	**210**	**275**
Rated voltage	Ur	kV	12	•	•	•	•
			17.5	•	•	•	•
Rated frequency	fr	Hz	50/60	•	•	•	•
Rated short duration power frequency withstand voltage (1)	Ud	kV	28	•	•	•	•
			38	•	•	•	•
Rated lightning impulse withstand voltage	Up	kV	75	•	•	•	•
			95	•	•	•	•
Rated short-circuit breaking current	Isc	kA	20	•	•		
			25	•	•	•	•
			31.5	•	•	•	•
Rated duration of short-circuit	tk	s	3	•	•	•	•
Rated normal current	Ir	A	630	•	•		
			800	•	•		
			1 250	•	•		
			1 600			•	
			2 000			•	
			2 500				•

Additional characteristics according to IEC 62271-100 are listed in the common characteristics section.
(1) Contact us for 42 kV - 5 min.

PM106425

PM108894

Tulip-type contacts

The shape of EasyPact EXE contact is tulip-type. The size depends on the rated current to provide a maximum contact surface optimizing heat dissipation and offering good compensation characteristics for electrodynamic forces. The Panel Builder should provide fixed type contacts with the correct shape, tolerance, and material characteristics compatible with the EasyPact EXE tulip-type contacts.

PM106426

Arms

The shape and size of EasyPact EXE arm depend on the rated lightning impulse voltage, the rated normal current, and the racking trolley stroke.

PM106402

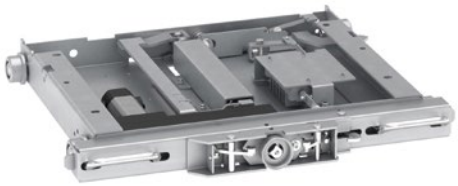

Racking device

EasyPact EXE racking device enables Panel Builder to design switchgear solutions with enhanced safety features. It has a robust interlocking system with the switchgear door, the circuit-breaker and the earthing switch. It can be equipped with an electric motor for remote racking from the control room.

Withdrawable Circuit Breaker (CB) - Tulip Contact

Dimensions

Phase distance 150 mm

Up to 17.5 kV / 31.5 kA / 1 250 A

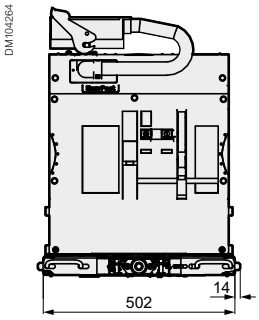

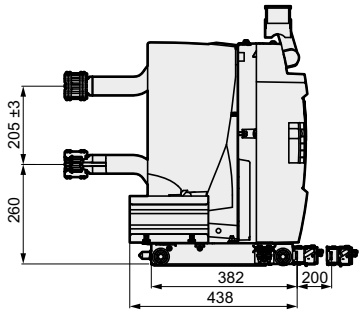

Phase distance 210 mm

Up to 17.5 kV / 31.5 kA / 1 250 A

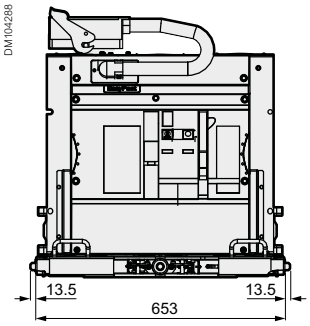

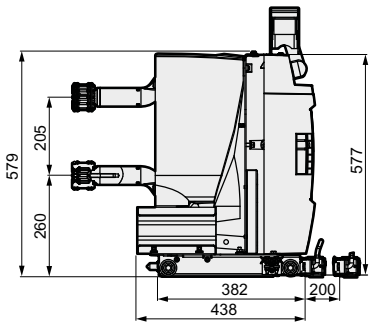

Phase distance 210 mm

Up to 17.5 kV / 31.5 kA / 2 000 A

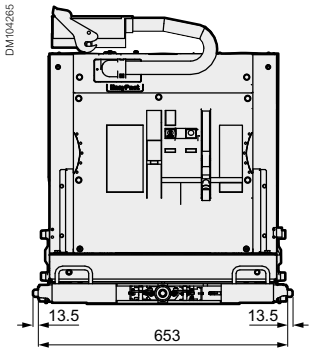

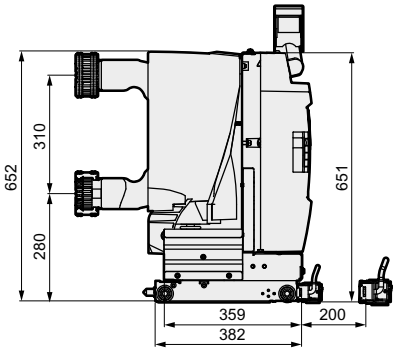

Phase distance 275 mm

Up to 17.5 kV / 31.5 kA / 2 500 A

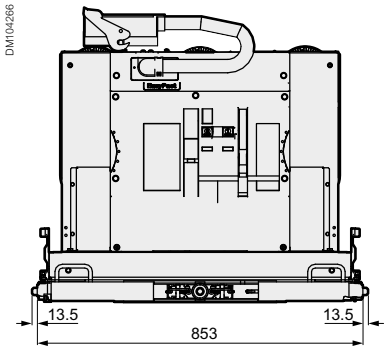

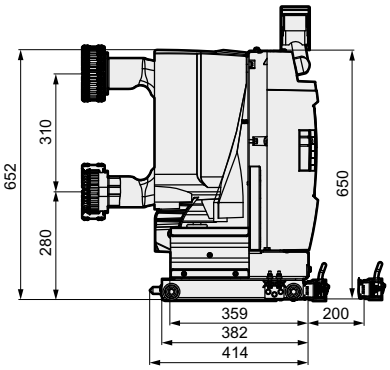

PM106414

The full set of 3D models is available at:
www.schneider-electric.com/en/product-range-download/63374-easypact-exe#tabs-top

Withdrawable Disconnecting Device (DD) - Tulip Contact

Main characteristics

PM105381

PM108895

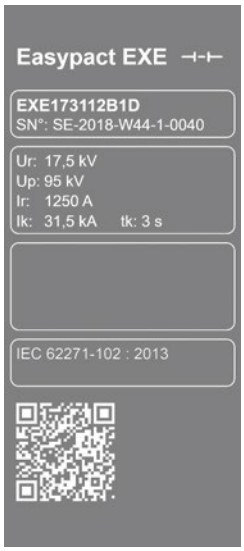

This device allows disconnection of the upstream and downstream circuits in the cubicle. It is installed in the same location as the withdrawable circuit beaker in the switchgear compartment, with the option to rack the device remotely.

It includes a device to lock it in the service position.

According to IEC 62271-102: 2013

Designation	Dimensions and electrical characteristics						
Phase distance (mm)				**150**	**210**	**210**	**275**
Rated voltage	Ur	kV	12	•	•	•	•
			17.5	•	•	•	•
Rated frequency	fr	Hz	50/60	•	•	•	•
Rated short duration power frequency withstand voltage (1)	Ud	kV	28	•	•	•	•
			38	•	•	•	•
Rated lightning impulse withstand voltage	Up	kV	75	•	•	•	•
			95	•	•	•	•
Rated short-time withstand current	Ik	kA	31.5	•	•	•	•
Rated peak withstand current	Ip	kA	82	•	•	•	•
Rated duration of short-circuit	tk	s	3	•	•	•	•
Rated normal current	Ir	A	1 250	•	•		
			2 000			•	
			2 500				•

(1) Contact us for 42 kV - 5 min.

Withdrawable Disconnecting Device (DD) - Tulip Contact

Dimensions

Phase distance 150 mm

Up to 17.5 kV / 31.5 kA / 1 250 A

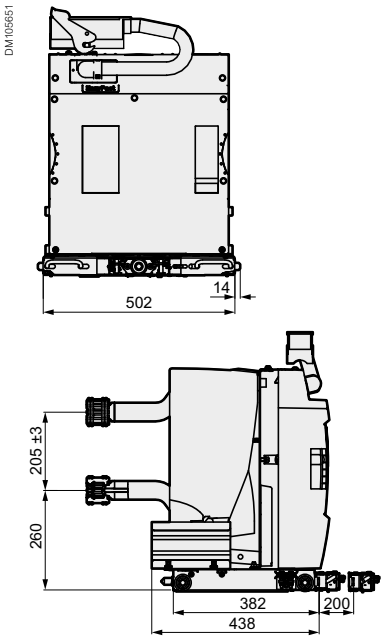

Phase distance 210 mm

Up to 17.5 kV / 31.5 kA / 1 250 A

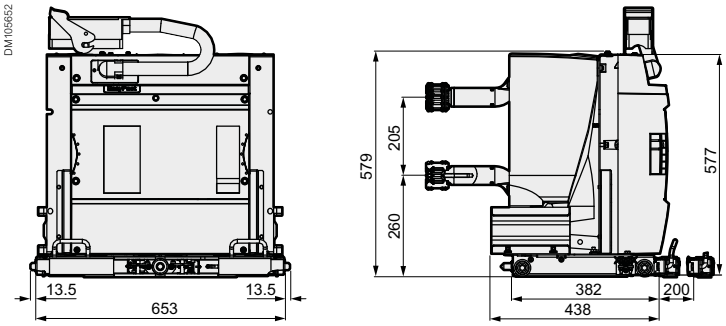

Phase distance 210 mm

Up to 17.5 kV / 31.5 kA / 2 000 A

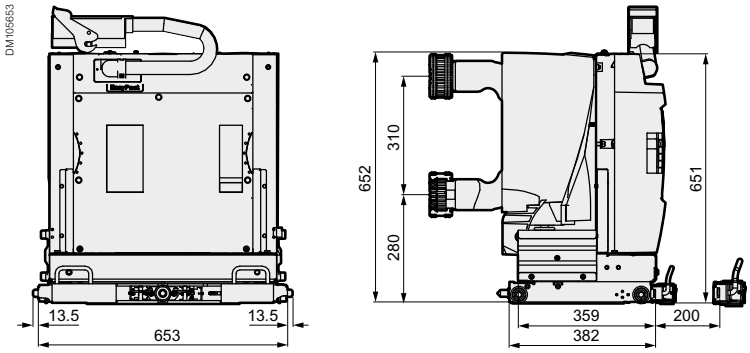

Phase distance 275 mm

Up to 17.5 kV / 31.5 kA / 2 500 A

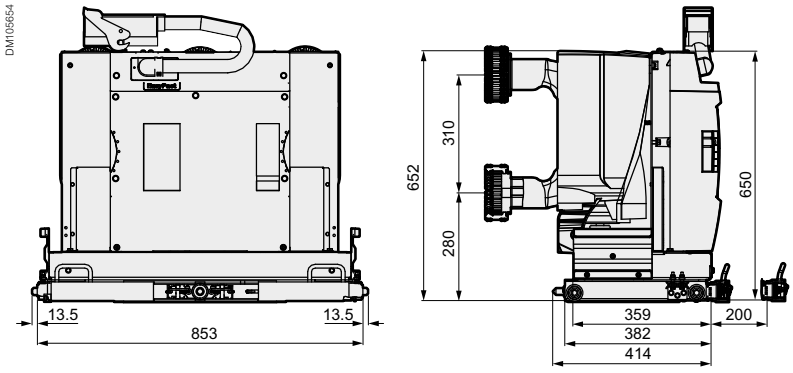

PM106414

The full set of 3D models is available at:
www.schneider-electric.com/en/product-range-download/63374-easypact-exe#tabs-top

General characteristics

Service and storage conditions

Normal service conditions

According to IEC 62271-1: 2017

EasyPact EXE has been designed to operate in the following conditions	
Ambient air temperature	• Minimum value: -25°C • Maximum value: 40°C • Average measured over 24 hours period ≤ 35°C
Altitude	Less than or equal to 1 000 m above sea level (derating coefficient to be applied for altitudes higher than 1 000 m)
Atmosphere	No dust, smoke, salt, corrosive or flammable gas or vapor
Humidity	• Average relative humidity over 24 hours ≤ 95% • Average relative humidity over 1 month ≤ 90% • Average vapor pressure over 24 hours ≤ 2.2 kPa • Average vapor pressure over 1 month ≤ 1.8 kPa

Other service conditions

If operated beyond the normal service conditions, the circuit breaker is submitted to accelerated aging.

The circuit breaker may only be used under conditions other than the normal service conditions with express written permission from Schneider Electric.

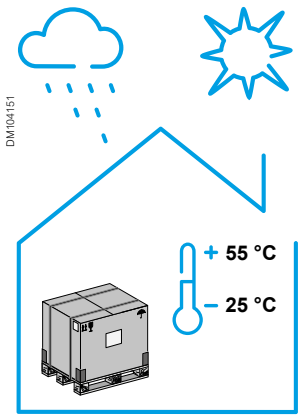

Storage

In order to preserve all of the device's characteristics when stored for prolonged periods, we recommend to store the device in its original packaging, in dry conditions, and sheltered from the sun and rain at a temperature between -25°C and +55°C.

The maximum storage period is 12 months.

If the device was stored:

- Between 6 and 12 months: perform basic preventive maintenance to ensure a correct device operation
- Beyond 12 month: contact your Schneider Electric Service local representative for device check-up.

General characteristics

Electrical characteristics (CB)

PM105382

According to IEC 62271-100: 2012

Common characteristics		12 kV	17.5 kV
Rated short-time withstand current (Ik/tk)	kA/3s (50/60 Hz)	= Isc	= Isc
Rated operating sequence	O-3 min - CO-3 min - CO	•	•
	O-0.3 s - CO-3 min - CO	•	•
	O-0.3 s - CO-15 s - CO	•	•
Operating times	Opening	< 50 ms	< 50 ms
	Breaking	< 66 ms	< 66 ms
	Closing	< 71 ms	< 71 ms
Electrical endurance		E2	E2
Rated line-charging breaking current		10-C2	10-C1
Rated cable-charging breaking current		25-C2	31.5-C1
Rated single capacitor bank breaking current	A-class at 1 250 A 25 kA	400-C2	400-C1(1)
	A-class at 1 250 A 31.5 kA	400-C1	400-C1(1)

(1) Contact your Schneider Electric sales representative for more information.

Mechanical endurance

EasyPact EXE installed in normal service condition and with preventive maintenance program is designed up to:

Mechanical endurance	
Circuit breaker	M2 (IEC 62271-100: 2012) 10 000 operating cycles
Racking trolley (disconnecting functions)	M1 (IEC 62271-102: 2018) 2 000 operating cycles
MCH motor	10 000 charging operations
MX/XF, MN releases	10 000 operations

Function and modules description

Function and modules description

Overview 38

Fixed Circuit Breaker 38

Withdrawable Circuit Breaker 39

Remote control auxiliaries 40

Mandatory auxiliaries 40

Optional auxiliaries 41

Indication 42

Withdrawability 43

Racking Device 43

Locking 44

Fixed Circuit Breaker 44

LV connection 45

Fixed circuit Breaker 45

Withdrawable Circuit Breaker 46

Racking Device interlocking 47

Overview

Fixed Circuit Breaker

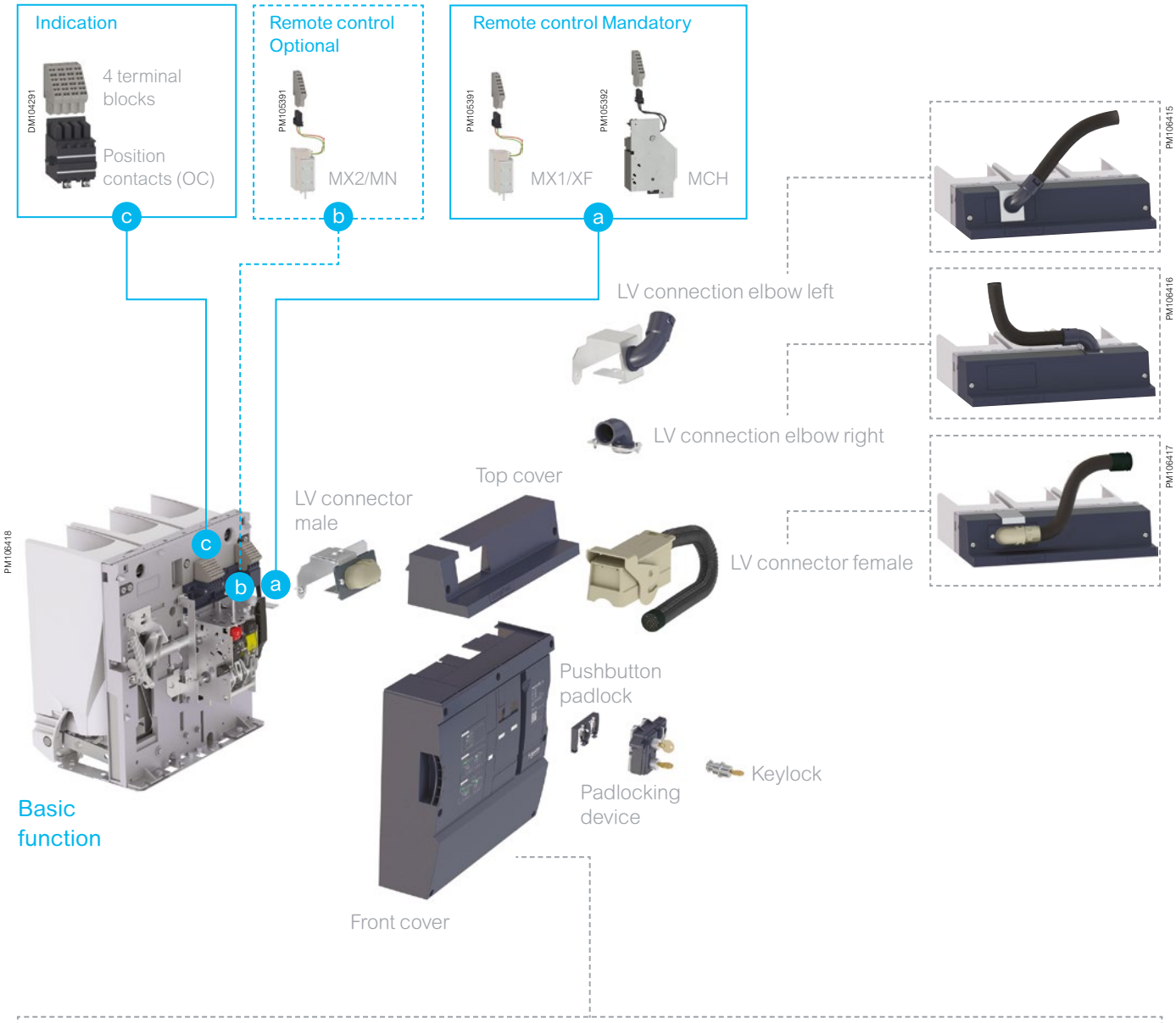

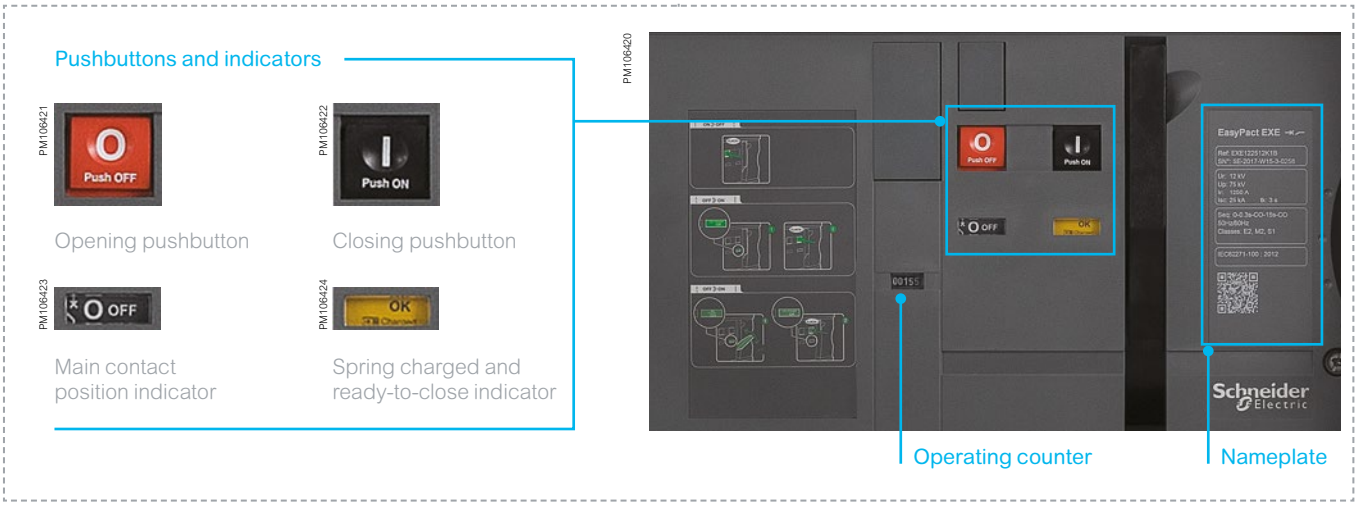

Overview

Withdrawable Circuit Breaker

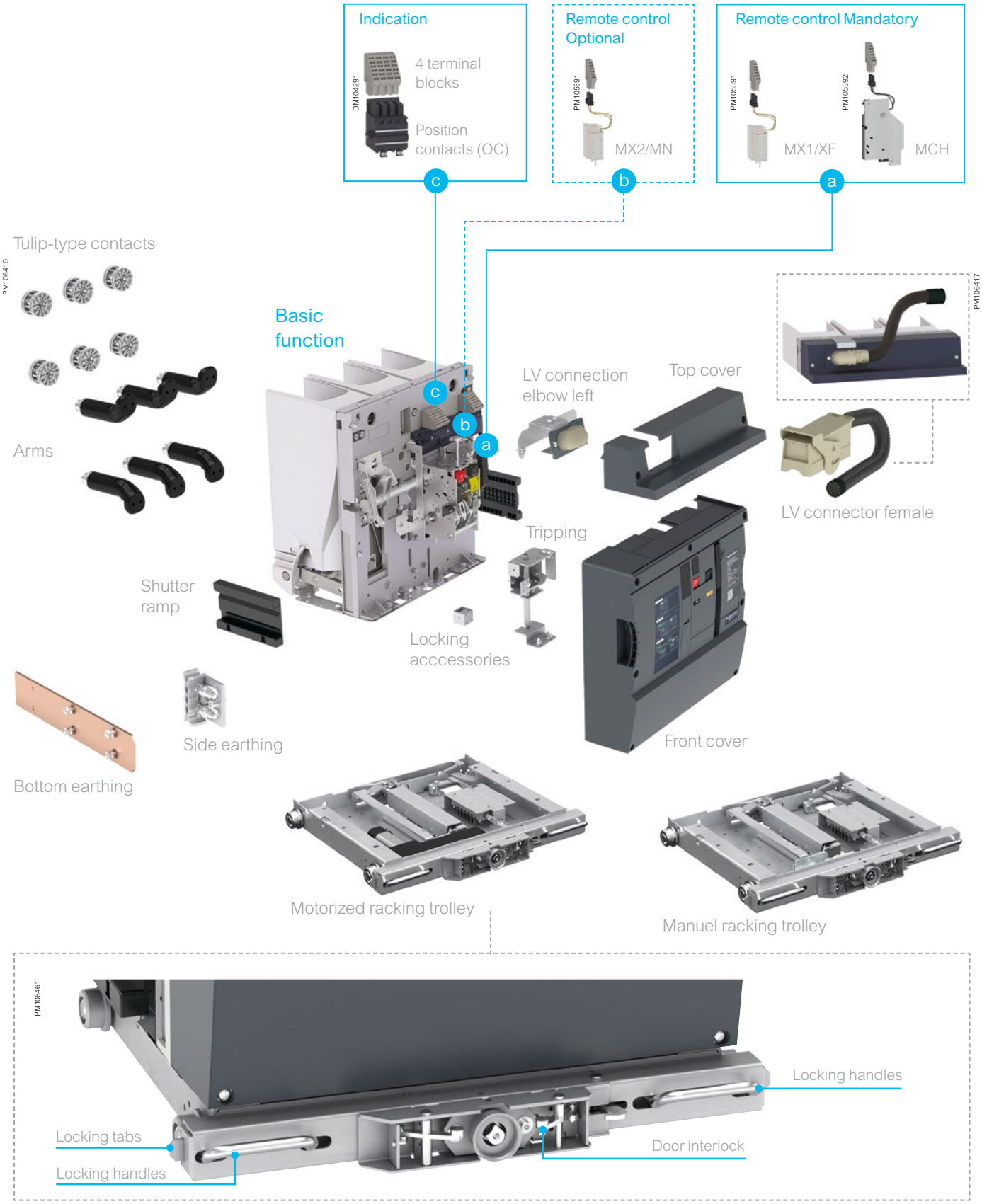

Remote control auxiliaries

Mandatory auxiliaries

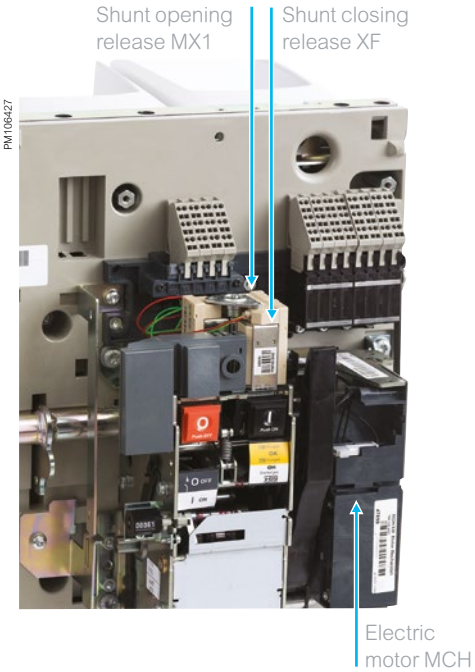

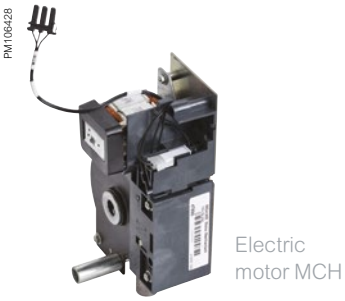

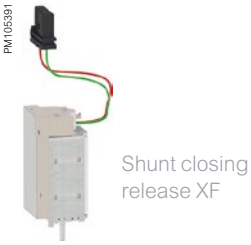

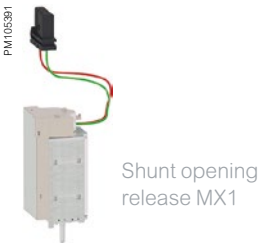

The remote control auxiliaries comprises an electric motor (MCH) a shunt closing release (XF), and a shunt opening release (MX1)

Electric motor (MCH)

The electric motor operates to charge the closing spring as soon as it is connected to the auxiliary power supply. This allows the circuit breaker to close after opening according to the rated operating sequence.

A lever is located on the front of the circuit breaker that enables the closing spring to be charged manually if the auxiliary power supply is unavailable.

The electric motor is equipped with an electrical contact to indicate the "spring charged" status of the mechanism.

The electric motor includes a gear reducer.

Characteristics	
Power supply	• DC: 24-30 V, 48-60 V, 110-130 V, 200-250 V • AC (50 Hz/60 Hz): 48-60 V, 100-130 V, 200-240 V
Operating range	0.85 to 1.1 Ua
Consumption (VA or W)	180
Motor overcurrent	2 to 3 In for 0.1 s
Charging time	≤7 s
MCH contact	10 A/240 V

Shunt closing release (XF)

A shunt closing release operates to close the circuit breaker when the voltage at the terminals of the release is between 85% and 110% of its rated voltage. The closing release is designed to withstand permanent power supply.

Characteristics		
Power supply	• DC: 24-30 V, 48-60 V, 100-130 V, 200-250 V • AC (50Hz/60Hz): 24 V, 48 V, 100-130 V, 200-250 V	
Operating range		0.85 to 1.1 Ua
Consumption (VA or W)	Triggering	200 (for 200 ms)
	Latched	4.5

Shunt opening release (MX1)

A shunt opening release operates to open the circuit breaker when the voltage at the terminals of the release is between 70% and 110% (in the case of direct current)- or between 85% and 110% (in the case of alternative current)- of its rated voltage. The opening release is designed to withstand permanent power supply and to lock the circuit breaker in the "open" position as long as the voltage is maintained at its terminals.

Characteristics		
Power supply	• DC: 24-30 V, 48-60 V, 100-130 V, 200-250 V • AC (50 Hz/60 Hz): 24 V, 48 V, 100-130 V, 200-250 V	
Operating range	• DC: 0.7 to 1.1 Ua • AC: 0.85 to 1.1 Ua	
Consumption (VA or W)	Triggering	200 (for 200 ms)
	Latched	4.5

Remote control auxiliaries

Optional auxiliaries

EasyPact EXE can be equipped with a second opening release that can be either a shunt opening release or an undervoltage release.

PM106427

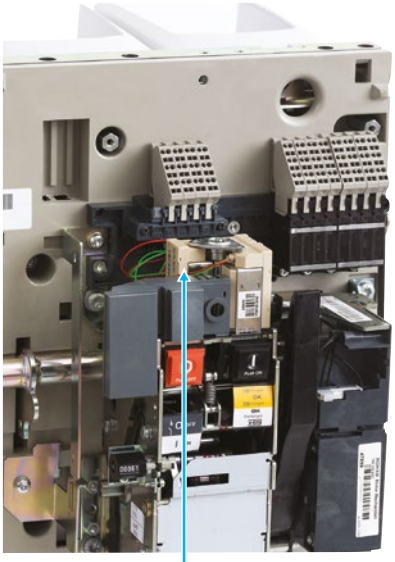

Shunt opening release MX2 or Under voltage release MN

PM105391

Shunt opening release MX2

PM105391

Undervoltage release MN

Second shunt opening release (MX2)

The second shunt opening release operates to open the circuit breaker when the voltage at the terminals of the release is between 70% and 110% (in the case of direct current)- or between 85% and 110% (in the case of alternative current)- of its rated voltage.

The opening release is designed to withstand permanent power supply and to lock the circuit breaker in the "open" position as long as the voltage is maintained at its terminals.

Characteristics		
Power supply	• DC: 24-30 V, 48-60V, 100-130 V, 200-250 V • AC (50Hz/60Hz): 24 V, 48 V, 100-130 V, 200-250 V	
Operating range	• DC: 0.7 to 1.1 Ua • AC: 0.85 to 1.1 Ua	
Consumption (VA or W)	Triggering	200 (for 200 ms)
	Latched	4.5

Undervoltage release (MN)

The undervoltage release operates to open the circuit breaker when the voltage at the terminals of the release falls below 35% of its rated voltage, even if the fall is slow and gradual.

The undervoltage release does not operate the circuit breaker when the voltage at its terminals exceeds 70% of its rated supply voltage. The area between 35% and 70% is uncertain, and the undervoltage release might operate to open the circuit breaker.

The closing of the circuit breaker is possible when the voltage at the terminals of the release is equal to or exceeds 85% of its rated voltage. On the other hand, the closing of the circuit breaker is impossible as long as the voltage at the terminals is below 35% of the rated supply voltage.

Characteristics		
Power supply	• DC: 24-30 V, 48-60 V, 100-130 V, 200-250 V • AC (50Hz/60Hz): 24 V, 48 V, 100-130 V, 200-250 V	
Operating range	Opening	0.35 to 0.7 Ua
	Closing	0.85 Ua
Consumption (VA or W)	Triggering	200 (for 200 ms)
	Latched	4.5

Release combination table

MCH	•	•	•
XF	•	•	•
MX1	•	•	•
MX2		•	
MN			•

Remote control auxiliaries

Indication

PM106429

Rotary type
contacts (OC)

Position contacts (OC)

EasyPact EXE is equipped with one block of four position contacts as standard, and the Panel Builder may add one or two additional blocks of four contacts. The maximum number of position contacts is twelve.

Characteristics				
Standard delivery	1 (1 block of 4 contacts)			
Maximum quantity	3 (3 blocks of 4 contacts)			
Breaking capacity (A)	Standard			Min. load: 100 mA/24 V
Cos φ: 0.3		V a.c.	240/380	10/6
		V d.c.	24/48	10/6 *
			125	10/6
			250	3

* standard contacts: 10 A; optional contacts: 6 A (temperature derating)

PM106430

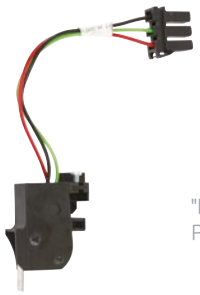

"Ready to close"
PF contact

"Ready to close" contact (PF)

A "ready to close" contact (PF) indicates that the circuit breaker is ready to close in the following conditions:

- The circuit breaker contacts are open
- The operating mechanism closing spring is charged
- The opening pushbutton is not activated (by a keylock or manually)
- The opening shunt release is not energized
- The undervoltage release, if present, is energized

EasyPact EXE is always equipped with 1 "ready to close" contact (PF) for remote control.

Characteristics				
Standard delivery	1			
Maximum quantity	1			
Breaking capacity (A)	Standard			Min. load: 100 mA/24 V
Cos φ: 0.3		V a.c.	240/380	5
		V d.c.	24/48	3
			125	0.3
			250	0.15

PM106431

Operation counter
(CDM)

Operation counter (CDM)

An operation counter counts the number of operating cycles (close-open) that the device has carried out.

EasyPact EXE is always delivered with an operation counter showing the number of close-open cycles that have been performed for the factory routine test.

Withdrawability

Racking Device

The EasyPact EXE withdrawable version requires a racking device, arms, and tulip-type contacts for connection to the switchgear power circuit, and a removable LV plug to connect auxiliary circuits.

EasyPact EXE racking function

EasyPact EXE racking device enables Panel Builder to design switchgear solutions with enhanced safety features. It has a robust interlocking system with the switchgear door, the removable LV plug, the circuit-breaker and the earthing switch.

It can be equipped with an electric motor for remote racking from the control room.

The Racking Device is composed of 3 elements:

- Racking Trolley
- Shutter Ramp
- Tripping

The EasyPact EXE racking function comprises:

- A racking trolley equipped with 4 wheels for moving on the rails located at the bottom of the circuit breaker compartment, and with shutter ramps to operate the shutter mechanism according to the racking trolley position
- A system to attach the racking trolley to the switchgear frame
- A racking trolley with a threaded shaft that rotates to move the circuit breaker inside the circuit breaker compartment
- 2 sets of 4 contacts to indicate electrically if the circuit breaker is in service position, intermediate position or in disconnected position
- A set of mechanical parts, called Tripping fixed on the mechanical support, to interlock the racking trolley with the following equipment:
  - Earthing switch
  - Circuit breaker
- An optional motor drive that rotates to move the circuit breaker inside the circuit breaker compartment.

PM106402

Racking Trolley

PM106405

Shutter ramps

PM106406

Tripping

Earthing

The racking device is earthed using bar earthing or through side earthing.

PM108896

Bottom earthing

PM108897

Side earthing

Motor controller

The motor controller is required for the remote operation of racking device, it is also have the feature of over-current protection.

PM108900

Motor controller

Locking

Fixed Circuit Breaker

Easypact EXE can be equipped with locking in permanent position either by padlock or by keylock and with pushbutton padlock.

Screen for pushbutton padlocking

An optional transparent screen can prevent access to the opening and/or closing pushbuttons on the circuit breaker.

Locking is achieved by means of one of the following:

- By 2 screws

DM103574_LG

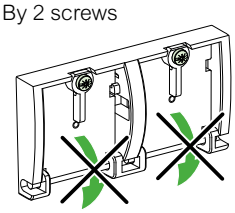

- By 3 padlocks
  (not supplied with the circuit breaker)

DM103572_LG

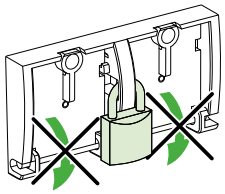

- By a lead seal
  (not supplied with the circuit breaker)

DM103573_LG

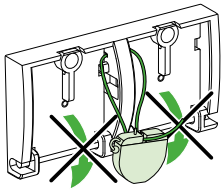

PM106433

PM106432

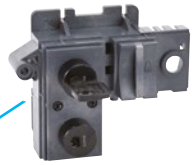

Locking the circuit breaker in the open position

PM106434

Screen for pushbutton padlocking

Locking in permanent open position by padlock

PM106464

Padlocking of the circuit breaker in the "open" position

PM106435

The circuit breaker is locked in the "open" position by maintaining the opening pushbutton in the engaged position with a padlock holder for 1 to 3 padlocks (not supplied).

Locking in permanent open position by keylock

The circuit breaker is locked in the "open" position by maintaining the opening pushbutton in the engaged position with a keylock device with the following options:

- 1 single keylock supplied with 2 identical keys
- 1 single keylock for the circuit breaker supplied with 1 key, plus 1 identical keylock delivered separately to be mounted on the device to be interlocked with the circuit breaker, using the key supplied for the circuit breaker.

PM106432

Keylocking of the circuit breaker in the "open" position

DM103771

Flat key

DM103773

Cylindrical key

The key is free after locking. The key can be used to operate or give access to remote devices (Earthing switch, Transformer ...).

LV connection

Fixed Circuit Breaker

PM105399

Elbow on the right

PM106463

Elbow on the left

PM105398

LV terminal

PM106461

58 pin male connector

EasyPact EXE is equipped with a set of terminal blocks to connect LV wiring to the circuit breaker auxiliary circuit. An elbow enables the wiring to pass through the circuit breaker front cover on either the right or the left side.

An optional flexible LV connector enables connection of the circuit breaker auxiliary circuits to the switchgear control cabinet in any circuit breaker positions: disconnected or service. It consists of a 58 pin male connector with flexible duct mounted on circuit breaker and a 58 pin female connector mounted on the switchgear frame to be connected to the LV cabinet.

Fixed version wiring diagram example

DM104256

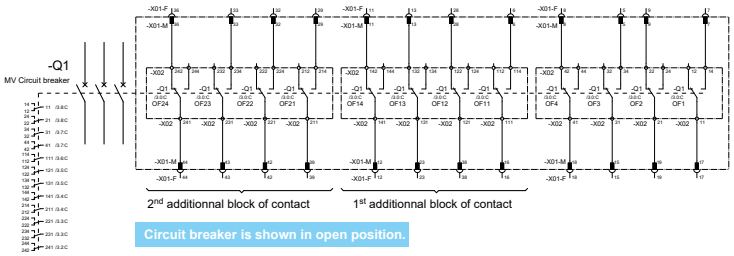

Circuit breaker is shown in open position.

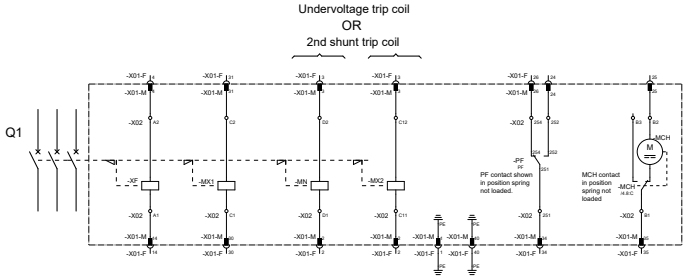

Circuit breaker is shown in open position.
Auxiliary supply off and control spring discharged.
The circuit diagram shows all possible equipments.

Note: please refer to the detail of drawing NNZ7536800.

LV connection

Withdrawable Circuit Breaker

PM106463

The LV connector collects electrical orders and status information from the circuit breaker terminal blocks and from the racking trolley terminal blocks. The number of pins in the LV connector (maximum 58 pins) may limit the number of available position contacts for the switchgear LV cabinet.

Withdrawable version wiring diagram example

DM103696

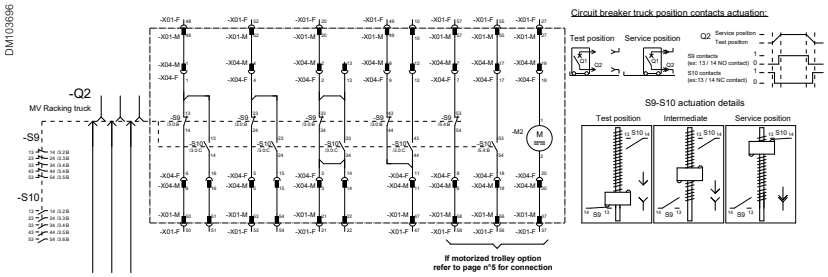

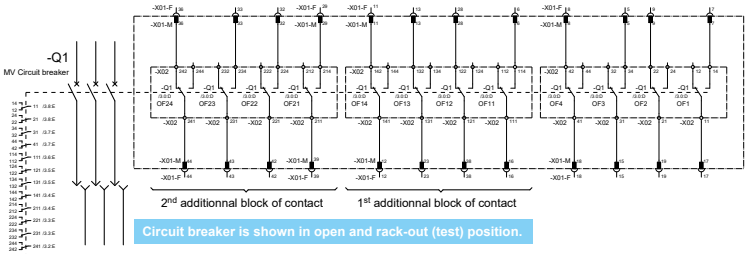

Circuit breaker is shown in open and rack-out (test) position.

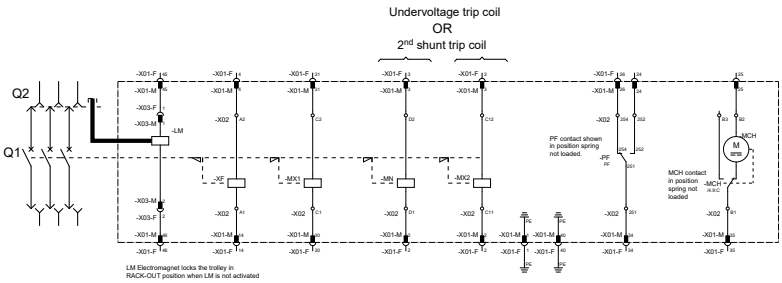

Circuit breaker is shown in open and rack-out (test) position.
Auxiliary supply off and control spring discharged.
The circuit diagram shows all possible equipments.

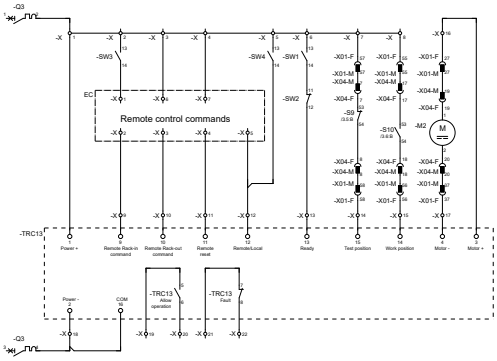

Wiring diagram and connection for the optional motorization of the racking trolley.

Note: please refer to the detail of drawing NNZ7536700.

Racking Device interlocking

The following table describes the interlocking functions available on the withdrawable version of EasyPact EXE.

How to use the table

Each box describes the possible status of parts interlocked with the circuit breaker at a given status.

- **Removed**: The circuit breaker is extracted from the switchgear
- **Disconnected/test**: The circuit breaker is inside the switchgear compartment; its power connections are separated from the switchgear contacts by shutters and the LV auxiliary circuits are connected
- **Intermediate**: The circuit breaker is moving from the disconnected position to the service position or vice versa
- **Service**: The circuit breaker power connections are connected to the switchgear contacts, the LV auxiliary circuits are connected, and the switchgear door is closed and locked

	Withdrawable circuit breaker positions			
	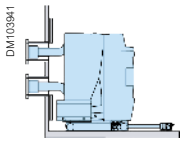	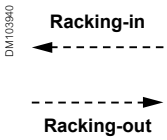	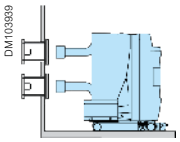	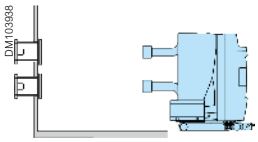
Parts	**Service**	**Intermediate**	**Disconnected/test**	**Removed**
Locking tabs	Locked	Locked	Locked / Unlocked	
LV connection plug	Connected	Connected	Connected / Disconnected	Disconnected
Compartment door	Closed and Locked	Closed and Locked	Unlocked	Unlocked
Circuit Breaker main contacts position	OPEN / CLOSED	OPEN	OPEN / CLOSED	OPEN / CLOSED
Earthing switch mechanical link position	Earthing Switch OPEN	Earthing Switch OPEN	Earthing Switch OPEN Earthing Switch CLOSED	
Shutters	OPEN	OPERATING	CLOSED	CLOSED

Product references

Product references

Commercial reference numbering system 50

Basic function Circuit Breaker (CB) 51

12 kV and 17.5 kV - 20 kA 51
12 kV and 17.5 kV - 25 kA 52
12 kV and 17.5 kV - 31.5 kA 53

Basic function Disconnecting Device (DD) 54

12 kV and 17.5 kV - up to 31.5 kA 54

Remote control and thermal monitoring auxiliaries 55

Mandatory 55
Optional 55
Indication 55
Racking Device motor control 55
Thermal Sensor with Spring Charging motor 56
Consumable Kits 56

Withdrawability 57

MV connection - Tulip contact 57
Racking Device 58

LV connection 59

Fixed 59
Withdrawable 59

Locking 60

Accessories 61

Labels 61
Rack-in / rack-out crank 61

Spare parts 62

Commercial reference numbering system

Commercial number composition

For circuit breaker, disconnecting device, and earthing device.

Example:

Basic function for VCB
12 kV - 25 kA - 630A - pd = 145 mm - IEC - Basic function Circuit Breaker

EXE - 12 - 25 - 06 - A - 1 - B

The commercial number composition is: **EXE122506A1B**

Please contact us for other versions such as GOST, etc.

EXE - ☐ - ☐ - ☐ - ☐ - 1 - ☐

Range	Code
EasyPact EXE	**EXE**

Rated voltage

Value	Code
12 kV	**12**
17.5 kV	**17**

Rated short-circuit breaking current

Value	Code
20 kA	**20**
25 kA	**25**
31.5 kA	**31**

Rated normal current

Value	Code
630 A	**06**
800 A	**08**
1 250 A	**12**
1 600 A	**16**
2 000 A	**20**
2 500 A	**25**

Function

Value	Code
Basic function circuit breaker	**B**
Basic function disconnecting device	**D**

Standard	Code
IEC	**1**

Phase-to-phase distance

Value	Code
145 mm	**A**
150 mm	**K**
185 mm	**B**
210 mm	**L**
240 mm	**C**
275 mm	**M**

Basic function Circuit Breaker (CB)

12 kV and 17.5 kV - 20 kA

PM106400

An EasyPact EXE Basic function Circuit Breaker (CB) consists of:

- The basic function circuit breaker
- 1 ready to close contact PF with 1 terminal block
- 1 block of 4 auxiliary contacts with 4 terminal blocks
- 4 additional terminal blocks
- 1 operating counter
- 1 receipt guide

Additional options may be added, using the catalog product references.

Basic function							
Phase distance (mm)		**145**	**185**	**240**	**150**	**210**	**275**
12 kV	630 A	EXE122006A1B	EXE122006B1B	-	EXE122006K1B	EXE122006L1B	-
	800 A	EXE122008A1B	EXE122008B1B	-	EXE122008K1B	EXE122008L1B	-
	1 250 A	EXE122012A1B	EXE122012B1B	-	EXE122012K1B	EXE122012L1B	-
	1 600 A	-	-	-	-	-	-
	2 000 A	-	-	-	-	-	-
	2 500 A	-	-	-	-	-	-
17.5 kV	630 A	EXE172006A1B	EXE172006B1B	-	EXE172006K1B	EXE172006L1B	-
	800 A	EXE172008A1B	EXE172008B1B	-	EXE172008K1B	EXE172008L1B	-
	1 250 A	EXE172012A1B	EXE172012B1B	-	EXE172012K1B	EXE172012L1B	-
	1 600 A	-	-	-	-	-	-
	2 000 A	-	-	-	-	-	-
	2 500 A	-	-	-	-	-	-

Notes:

- The 12 kV basic function may be used for 7.2 kV rated voltage

Check your commercial number:

EXE - [ ] - 20 - [ ] - [ ] - 1 - B

Range	Code
EasyPact EXE	**EXE**

Rated voltage

Value	Code
12 kV	**12**
17.5 kV	**17**

Rated short-circuit breaking current

Value	Code
20 kA	**20**

Rated normal current

Value	Code
630 A	**06**
800 A	**08**
1 250 A	**12**

Function

Value	Code
Basic function circuit breaker	**B**

Standard	Code
IEC	**1**

Phase-to-phase distance

Value	Code
145 mm	**A**
150 mm	**K**
185 mm	**B**
210 mm	**L**

Basic function Circuit Breaker (CB)

12 kV and 17.5 kV - 25 kA

PM106400

An EasyPact EXE Basic function Circuit Breaker (CB) consists of:

- The basic function circuit breaker
- 1 ready to close contact PF with 1 terminal block
- 1 block of 4 auxiliary contacts with 4 terminal blocks
- 4 additional terminal blocks
- 1 operating counter
- 1 receipt guide

Additional options may be added, using the catalog product references.

Basic function							
Phase distance (mm)		**145**	**185**	**240**	**150**	**210**	**275**
12 kV	630 A	EXE122506A1B	EXE122506B1B	-	EXE122506K1B	EXE122506L1B	-
	800 A	EXE122508A1B	EXE122508B1B	-	EXE122508K1B	EXE122508L1B	-
	1 250 A	EXE122512A1B	EXE122512B1B	-	EXE122512K1B	EXE122512L1B	-
	1 600 A	-	EXE122516B1B	-	-	EXE122516L1B	-
	2 000 A	-	EXE122520B1B	-	-	EXE122520L1B	-
	2 500 A	-	-	EXE122525C1B	-	EXE122525L1B	EXE122525M1B
17.5 kV	630 A	EXE172506A1B	EXE172506B1B	-	EXE172506K1B	EXE172506L1B	-
	800 A	EXE172508A1B	EXE172508B1B	-	EXE172508K1B	EXE172508L1B	-
	1 250 A	EXE172512A1B	EXE172512B1B	-	EXE172512K1B	EXE172512L1B	-
	1 600 A	-	EXE172516B1B	-	-	EXE172516L1B	-
	2 000 A	-	EXE172520B1B	-	-	EXE172520L1B	-
	2 500 A	-	-	EXE172525C1B	-	EXE172525L1B	EXE172525M1B

Notes:

- The 12 kV basic function may be used for 7.2 kV rated voltage

Check your commercial number:

EXE - [ ] - 25 - [ ] - [ ] - 1 - B

Range	Code
EasyPact EXE	**EXE**

Rated voltage

Value	Code
12 kV	**12**
17.5 kV	**17**

Rated short-circuit breaking current

Value	Code
25 kA	**25**

Rated normal current

Value	Code
630 A	**06**
800 A	**08**
1 250 A	**12**
1 600 A	**16**
2 000 A	**20**
2 500 A	**25**

Function

Value	Code
Basic function circuit breaker	**B**

Standard	Code
IEC	**1**

Phase-to-phase distance

Value	Code
145 mm	**A**
150 mm	**K**
185 mm	**B**
210 mm	**L**
240 mm	**C**
275 mm	**M**

Basic function Circuit Breaker (CB)

12 kV and 17.5 kV - 31.5 kA

PM106400

An EasyPact EXE Basic function Circuit Breaker (CB) consists of:

- The basic function circuit breaker
- 1 ready to close contact PF with 1 terminal block
- 1 block of 4 auxiliary contacts with 4 terminal blocks
- 4 additional terminal blocks
- 1 operating counter
- 1 receipt guide

Additional options may be added, using the catalog product references.

Basic function							
Phase distance (mm)		**145**	**185**	**240**	**150**	**210**	**275**
12 kV	630 A	EXE123106A1B	EXE123106B1B	-	EXE123106K1B	EXE123106L1B	-
	800 A	EXE123108A1B	EXE123108B1B	-	EXE123108K1B	EXE123108L1B	-
	1 250 A	EXE123112A1B	EXE123112B1B	-	EXE123112K1B	EXE123112L1B	-
	1 600 A	-	EXE123116B1B	-	-	EXE123116L1B	-
	2 000 A	-	EXE123120B1B	-	-	EXE123120L1B	-
	2 500 A	-	-	EXE123125C1B	-	EXE123125L1B	EXE123125M1B
17.5 kV	630 A	EXE173106A1B	EXE173106B1B	-	EXE173106K1B	EXE173106L1B	-
	800 A	EXE173108A1B	EXE173108B1B	-	EXE173108K1B	EXE173108L1B	-
	1 250 A	EXE173112A1B	EXE173112B1B	-	EXE173112K1B	EXE173112L1B	-
	1 600 A	-	EXE173116B1B	-	-	EXE173116L1B	-
	2 000 A	-	EXE173120B1B	-	-	EXE173120L1B	-
	2 500 A	-	-	EXE173125C1B	-	EXE173125L1B	EXE173125M1B

Notes:

- The 12 kV basic function may be used for 7.2 kV rated voltage

Check your commercial number:

EXE - [ ] - 31 - [ ] - [ ] - 1 - B

Range	Code
EasyPact EXE	**EXE**

Rated voltage

Value	Code
12 kV	**12**
17.5 kV	**17**

Rated short-circuit breaking current

Value	Code
31.5 kA	**31**

Rated normal current

Value	Code
630 A	**06**
800 A	**08**
1 250 A	**12**
1 600 A	**16**
2 000 A	**20**
2 500 A	**25**

Function

Value	Code
Basic function circuit breaker	**B**

Standard	Code
IEC	**1**

Phase-to-phase distance

Value	Code
145 mm	**A**
150 mm	**K**
185 mm	**B**
210 mm	**L**
240 mm	**C**
275 mm	**M**

Basic function Disconnecting Device (DD)

12 kV and 17.5 kV - up to 31.5 kA

PM108901

An EasyPact EXE Basic function Disconnecting Device (DD) consists of:

- The basic function Disconnecting Device
- An interlocking cam
- 1 receipt guide

Additional options may be added, using the catalog product references.

Basic function				
Phase distance (mm)		**150**	**210**	**275**
12 kV	630 A	-	-	-
	800 A	-	-	-
	1 250 A	EXE123112K1D	EXE123112L1D	-
	1 600 A	-	-	-
	2 000 A	-	EXE123120L1D	-
	2 500 A	-	-	EXE123125M1D
17.5 kV	630 A	-	-	-
	800 A	-	-	-
	1 250 A	EXE173112K1D	EXE173112L1D	-
	1 600 A	-	-	-
	2 000 A	-	EXE173120L1D	-
	2 500 A	-	-	EXE173125M1D

Notes:

- The 12 kV basic function may be used for 7.2 kV rated voltage

Check your commercial number:

EXE - [ ] - 31 - [ ] - [ ] - 1 - D

Range	Code
EasyPact EXE	**EXE**

Rated voltage

Value	Code
12 kV	**12**
17.5 kV	**17**

Rated short-circuit breaking current

Value	Code
31.5 kA	**31**

Rated normal current

value	Code
1 250 A	**12**
1 600 A	**16**
2 000 A	**20**
2 500 A	**25**

Function

Value	Code
Basic function disconnecting device	**D**

Standard	Code
IEC	**1**

Phase-to-phase distance

Value	Code
145 mm	**A**
150 mm	**K**
185 mm	**B**
210 mm	**L**
240 mm	**C**
275 mm	**M**

Remote control and thermal monitoring auxiliaries

Mandatory auxiliaries		Voltage		References
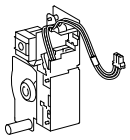 DM103743	Electric motor MCH	DC	24-30 V	EXECH02D
			48-60 V	EXECH04
			100-125 V	EXECH10D
			200-250 V	EXECH20D
	Electric motor MCH	AC 50/60 Hz	48-60 V	EXECH04
			100-130 V	EXECH10A
			200-240 V	EXECH20A
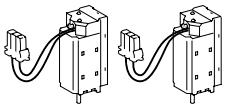 DM103745	Opening release MX & closing release XF	DC / AC (50/60 Hz)	24-30 V d.c./24 V a.c. (1 part)	2x 59284
			48-60 V d.c./48 V a.c. (1 part)	2x 59285
			100-130 V d.c./100-130 V a.c. (1 part)	2x 59286
			200-250 V d.c./200-250 V a.c. (1 part)	2x 59287

Optional auxiliaries		Voltage		References
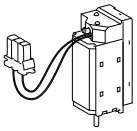 DM103747	Opening release MX (2nd)	DC / AC (50/60 Hz)	24-30 V d.c./24 V a.c.	59284
			48-60 V d.c./48 V a.c.	59285
			100-130 V d.c./100-130 V a.c.	59286
			200-250 V d.c./200-250 V a.c.	59287
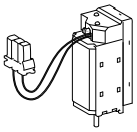 DM103747	Undervoltage release MN	DC / AC (50/60 Hz)	24-30 V d.c. / 24 V a.c.	59288
			48-60 V d.c. / 48 V a.c.	59289
			110-130 V d.c. / 100-130 V a.c.	59290
			200-250 V d.c. / 200-250 V a.c.	59291

Indication		Description	References
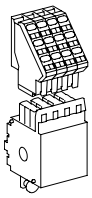 DM103749	Additional position contacts OC (1 or 2 blocks of 4 NO/NC maximum)	4 NO/NC auxiliary contact 5 A - 240 V	47887
		Terminal block (1 part)	4x 47074

Racking Device motor control (Installed in LV cabinet)		
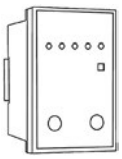 DM108698	Racking Trolley LV MC 110 V a.c./V d.c.	EXETRLMC10
	Racking Trolley LV MC 220 V a.c./V d.c.	EXETRLMC20

Remote control and thermal monitoring auxiliaries

Thermal Sensor with electric motor MCH	Description	References
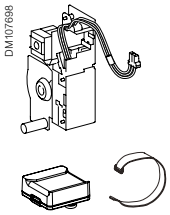 DM107698	MCH 24-30 V d.c. with 1TH110	EXECH02DTH1
	MCH 48-60 V d.c. - V a.c. with 1TH110	EXECH04TH1
	MCH 100-125 V d.c. with 1TH110	EXECH10DTH1
	MCH 200-250 V d.c. with 1TH110	EXECH20DTH1
	MCH 100-125 V a.c. with 1TH110	EXECH10ATH1
	MCH 200-250 V a.c. with 1TH110	EXECH20ATH1
	MCH 24-30 V d.c. with 2TH110	EXECH02DTH2
	MCH 48-60 V d.c. - V a.c. with 2TH110	EXECH04TH2
	MCH 100-125 V d.c. with 2TH110	EXECH10DTH2
	MCH 200-250 V d.c. with 2TH110	EXECH20DTH2
	MCH 100-125 V a.c. with 2TH110	EXECH10ATH2
	MCH 200-250 V a.c. with 2TH110	EXECH20ATH2
	MCH 24-30 V d.c. with 3TH110	EXECH02DTH3
	MCH 48-60 V d.c. - V a.c. with 3TH110	EXECH04TH3
	MCH 100-125 V d.c. with 3TH110	EXECH10DTH3
	MCH 200-250 V d.c. with 3TH110	EXECH20DTH3
	MCH 100-125 V a.c. with 3TH110	EXECH10ATH3
	MCH 200-250 V a.c. with 3TH110	EXECH20ATH3
	MCH 24-30 V d.c. with 4TH110	EXECH02DTH4
	MCH 48-60 V d.c. - V a.c. with 4TH110	EXECH04TH4
	MCH 100-125 V d.c. with 4TH110	EXECH10DTH4
	MCH 200-250 V d.c. with 4TH110	EXECH20DTH4
	MCH 100-125 V a.c. with 4TH110	EXECH10ATH4
	MCH 200-250 V a.c. with 4TH110	EXECH20ATH4

Consumable Kits	Description	References
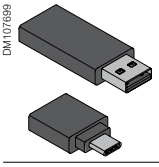 DM107699	Zigbee Dongle + Adaptor	REL52867
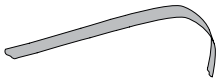 DM107700	Ferromagnetic ribbon (62M min)	EMS59441
DM107701	NFC Tag (50 units min)	REL52862

Withdrawability

MV connection - Tulip contact

Caption: Only identical colour shapes can be associated.

Arms for Tulip cluster	Phase distance 150	Phase distance 210		Phase distance 275	Description	References
Set of 3 Arms non Insulated 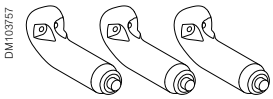	●	◆			MV Arms 630 A Not Insulated for Tulip cluster	EXEARM06B
	●	◆			MV Arms 800 A - 1 250 A Not Insulated for Tulip cluster	EXEARM12B
Set of 3 Arms non Insulated 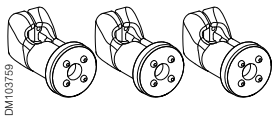			▲		MV Arms 1600 A - 2 000 A Not Insulated for Tulip cluster	EXEARM20B
				⬢	MV Arms 2500 A Not Insulated for Tulip cluster	EXEARM25B
Set of 3 Arms Insulated 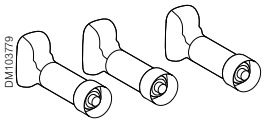	●	◆			MV Arms 630 A Insulated for Tulip cluster with Up = 95 kV	EXEARM06B1
	●	◆			MV Arms 800 A - 1250 A Insulated for Tulip cluster with Up = 95 kV	EXEARM12B1

Field deflector	Phase distance 150	Phase distance 210		Phase distance 275	Description	References
Set of 3 Field Deflectors 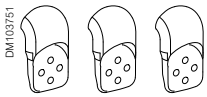	●	◆			Field Deflectors Coated-95KV BIL	EXEFLDFBE
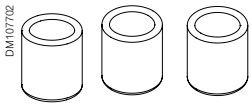	●	◆			Field Deflector for upper arm	EXEFLDFU

Tulip cluster	Phase distance 150	Phase distance 210		Phase distance 275	Description	References
Set of 6 Tulip cluster 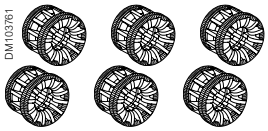	●	◆			MV Tulip cluster 630 A - 800 A- 1 250 A	EXECLU12B
			▲		MV Tulip cluster 1 600 A - 2 000 A	EXECLU20B
				⬢	MV Tulip cluster 2 500 A	EXECLU25B

Withdrawability

Racking device

Caption: Only identical colour shapes can be associated.

Manual Racking Trolley for 200 mm stroke	Phase distance 150	210		275	Description	References
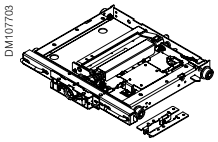 DM107703	■				Racking trolley 150 mm stroke 200 mm manual	EXETRKKB2
		●	◆		Racking trolley 210 mm stroke 200 mm manual	EXETRKLB2
				▲	Racking trolley 275 mm stroke 200 mm manual	EXETRKMB2

Motorized Racking Trolley for 200 mm stroke	Phase distance 150	210		275	Description	References
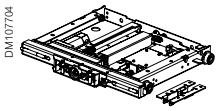 DM107704	■				Trolley 150 stroke 200 motorized 110 V a.c./V d.c.	EXETRKKB2M10
		●	◆		Trolley 210 stroke 200 motorized 110 V a.c./V d.c.	EXETRKLB2M10
				▲	Trolley 275 stroke 200 motorized 110 V a.c./V d.c.	EXETRKMB2M10
	■				Trolley 150 stroke 200 motorized 220 V a.c./V d.c.	EXETRKKB2M20
		●	◆		Trolley 210 stroke 200 motorized 220 V a.c./V d.c.	EXETRKLB2M20
				▲	Trolley 275 stroke 200 motorized 220 V a.c./V d.c.	EXETRKMB2M20

Racking Trolley Earthing	Phase distance 150	210		275	Description	References
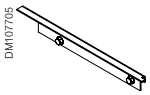 DM107705	■	●	◆	▲	Racking trolley bottom earthing	EXETRECB2
DM107706	■	●	◆	▲	Racking trolley side earthing	EXETRECB1

Trolley Base	Phase distance 150	210		275	Description	References
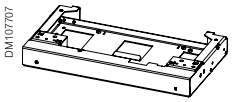 DM107707			◆		Racking trolley Base 210 stroke 200 CD 310	EXETRPBL
				▲	Racking trolley Base 275 stroke 200 CD 310	EXETRPBM

Shutter Ramp	Phase distance 150	210		275	Description	References
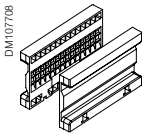 DM107708	■	●			Shutter ramp CD 205 mm 1250 A	EXESHRP5
			◆	▲	Shutter ramp CD 310 ≥ 1600 A	EXESHRP2

Tripping chain for Withdrawable VCB	Phase distance 150	210		275	Description	References
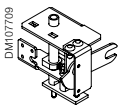 DM107709	■	●			Trolley Tripping Component ≤1250 A	EXETRIP5
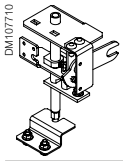 DM107710			◆	▲	Trolley Tripping Component ≥1250 A	EXETRIP6

LV connection

Fixed type LV connection

LV 58 pins connector (M&F)		Description	References
DM107711 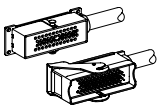	For fixed VCB	LV 58 pins connector (Male & Female) for fixed device	EXPLWB
Elbow for LV connection			
DM103765 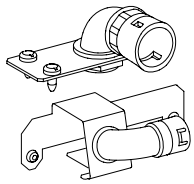	Elbow	LV connection elbow right	EXEELR
		LV connection elbow left	EXEELL

Withdrawable type LV connection

LV 58 pins connector (M&F)		Description	References
DM107711 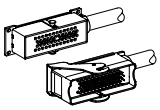	For withdrawable VCB	LV 58 pins connector (male & female) for withdrawable device	EXPLWB

Locking

Locking accessories for Fixed type		Description		References
DM103753 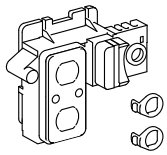	Padlocking device	Locking of the circuit breaker in the open position by padlock (Padlock or key locks not supplied)		48541
DM103775 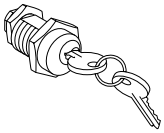	Locking of the circuit breaker in the open position by keylocks	Flat key	1 key lock + 2 flat keys	41940
			2 key locks + 1 flat key [1]	41950
DM103777 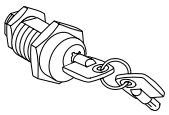	Locking of the circuit breaker in the open position by keylocks	Cylindrical key	1 key lock + 2 cylindrical keys	42888
			2 key locks + 1 cylindrical key [1]	42878
DM103755 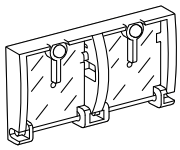	Push button padlock	Disabling of O/C circuit breaker pushbutton (padlock not supplied)		48536

[1] One keylock mounted on the breaker, + one identical keylock supplied separately for interlocking with another device.

Locking accessories for Withdrawable type	Description	References
DM107712 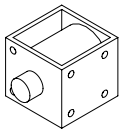	Racking device locking magnet 24 V d.c. - V a.c.	EXETR2LKMA02
	Racking device locking magnet 48 V d.c. - V a.c.	EXETR2LKMA04
	Racking device locking magnet 110 V d.c. - V a.c.	EXETR2LKMA10
	Racking device locking magnet 220 V d.c. - V a.c.	EXETR2LKMA20

Accessories

Labels		Description	References
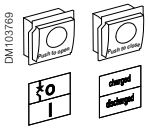	Labels kit for push button and indicator	Labels kit for push button and indicator (O/C) (green / red)	EXELBPB

Rack-in / rack-out crank	Description	References
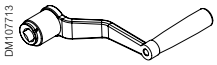	Truck operating shaft	EXESHFT2

Spare parts

- Only End Users (level 2) are allowed to replace the components listed below. These kit components should only be assembled, installed, used, tested, repaired or maintained by qualified personnal
- To order spare parts, please contact your Schneider Electric representative or your equipment manufacturer
- For any modification or upgrade of the circuit breaker, contact your equipment manufacturer or Schneider Electric

Basic function circuit breaker		Description	References
DM103787 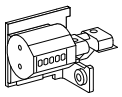	Operating counter	Counter	48535
DM103767 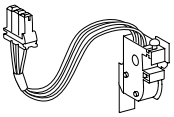	Ready to close contact PF	Ready to close contact 51-240 V	47080

Device covers		Description	References
DM103789 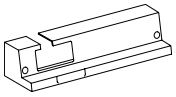	Removable top cover	Removable top cover with screw	EXECOTO
DM103791 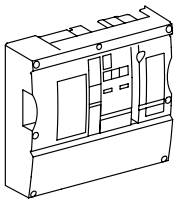	Main front cover for CB	Circuit Breaker main front cover with screw. Please contact Schneider Electric sales representative for more information to obtain nameplate of the Device.	EXECOFRCB
DM105655 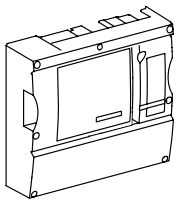	Main front cover for DD	Disconnecting Device main front cover with screw. Please contact Schneider Electric sales representative for more information to obtain nameplate of the Device.	EXECOFRDD

L-Frame cradle

L-Frame cradle

Introduction	66
L-Frame cradle references	68
Dimensions	69

Introduction

The L-Frame cradle is supplied as a self-supporting frame, including all interlocks and racking features, and help provide a reliable and cost-effective solution for integration in a wide range of indoor Air Insulated Switchgear.

The L-Frame cradle brings the benefits of Schneider Electric proven technology to the design and manufacture of withdrawable switchgear cubicles.

It provides to our Partners a complete solution with connection of the circuit breaker to the contacts in the bushings and allows the Partners to focus and shorten the design of the switchgear.

PM105644

EasyPact EXE
and L-frame cradle

Cradle for integration of switching devices

The L-Frame cradle is delivered fully assembled and ready for integration of EasyPact EXE circuit breakers and consists of:

- A left and a right sides frames
- Shutters with their shutter mechanisms
- Rails for guiding the circuit breaker from test to service position
- Bushings with fixed contacts
- Copper bars for connection to the main Busbar of the switchgear
- Two holes on the front of the L-Frame cradle for guiding and aligning the extraction table
- A self-supporting frame

As an option, it includes a fully rated and interlocked earthing switch. It can give to the Partners the advantage of a type tested solution for the earthing switch.

PM105645

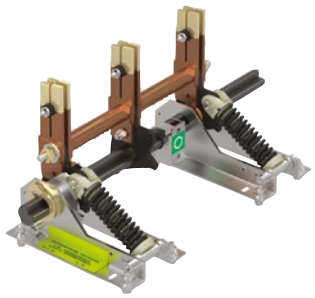

Earthing switch

The earthing switch is assembled and set by the Schneider Electric manufacturing plant. For 12 kV/17.5 kV, only the fixed contacts (quantity 3 delivered with the L-Frame cradle as loose components) will have to be assembled and adjusted on the main circuit of the switchgear.

The earthing switch includes:

- An operating mechanism mounted on the right side of the L-Frame cradle
- A power circuit unit with a fast-acting closing mechanism independent of the operator
- A mechanical interlocking with the circuit breaker and prevents:
  - racking in the circuit breaker if the earthing switch is closed
  - closing the earthing switch if the circuit breaker is not opened and fully racked out

Introduction

According to IEC 62271-200: 2011-10

Designation			Dimensions and electrical characteristics			
Phase distance (mm)				150	210	275
Rated Voltage	Ur	kV	12	•	•	•
			17.5	•	•	•
Rated frequency	fr	Hz	50 / 60	•	•	•
Rated short duration power frequency withstand voltage	Ud	kV	28[(1)]	•	•	•
			38	•	•	•
Rated lightning impulse withstand voltage	Up	kV	75	•	•	•
			95	•	•	•
Rated short-time withstand current	Ik	kA	25	•	•	•
			31.5	•	•	•
Rated duration of short-circuit	tk	s	3	•	•	•
Rated normal current	Ir	A	630 / 800	•	•	
			1 250	•	•	
			1 600 / 2 000		•	
			2 500			•
Preferred cubicle width		mm		650	800	1000

(1) In accordance with GOST standard: 42 kV 5 min

L-Frame cradle references

Cradle without earthing switch

PM105646

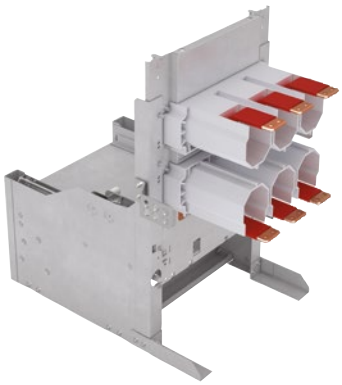

	Phase distance (mm)		150	210	275
12 / 17.5 kV	Up to 1 250 A	Up to 31.5 kA	AVXN10478-16	AVXN10478-17	-
	1 600 A / 2 000 A	Up to 31.5 kA	-	AVXN10478-18	-
	2 500 A	Up to 31.5 kA	-	-	AVXN10478-19

Cradle with earthing switch

PM105647

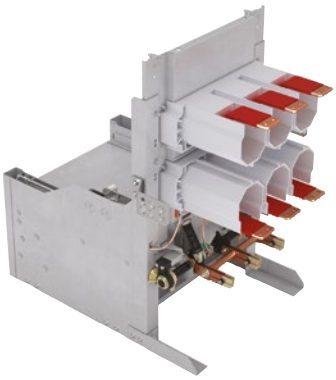

	Phase distance (mm)		150	210	275
12 / 17.5 kV	Up to 1 250 A	Up to 31.5 kA	AVXN10478-01	AVXN10478-12	-
	1 600 A / 2 000 A	Up to 31.5 kA	-	AVXN10478-13	-
	2 500 A	Up to 31.5 kA	-	-	AVXN10478-14

Earthing Switch handle	Description	Reference
PM105648	Earthing switch operating handle	CHD1000063P0005

Note: The 12 kV cradle may be used for 7.2 kV rated voltage / Please contact your Schneider Electric sales representative for more information

Dimensions

Without Earthing switch

Up to 17.5 kV

Up to 31.5 kA / Up to 1 250 A

Phase distance 150 mm

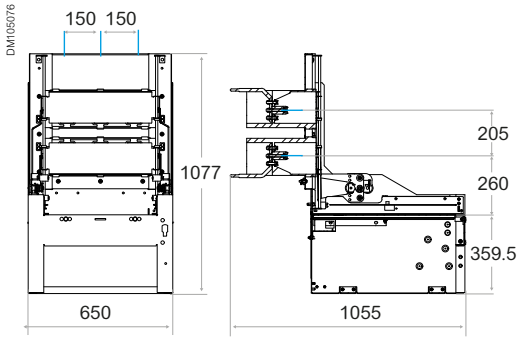

Phase distance 210 mm

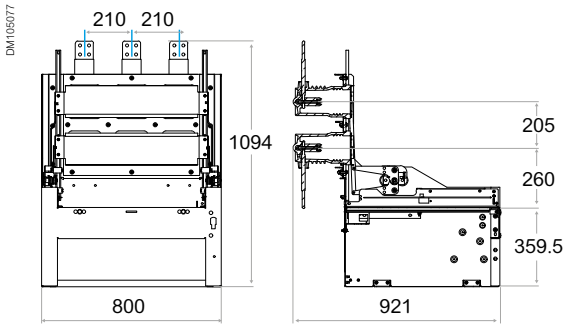

31.5 kA / Up to 1 250 A, up to 31.5 kA / 1 600 A - 2 000 A

Phase distance 210 mm

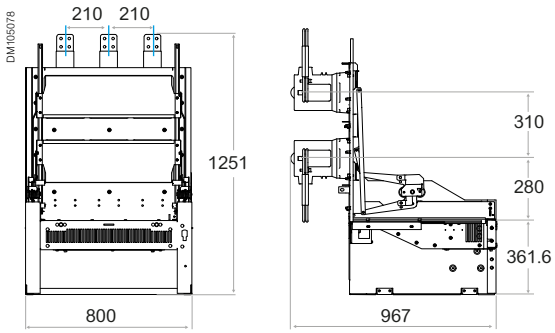

Up to 31.5 kA / 2 500 A

Phase distance 275 mm

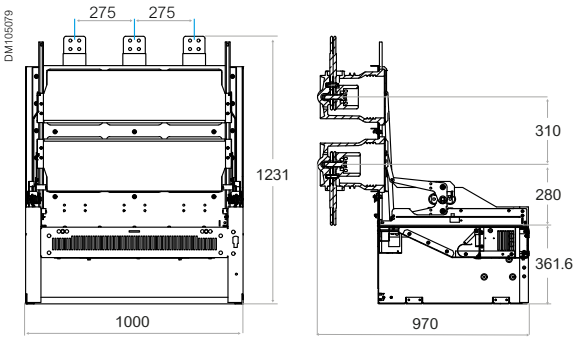

Dimensions

Without Earthing switch

Up to 17.5 kV

Up to 31.5 kA / Up to 1 250 A

Phase distance 150 mm

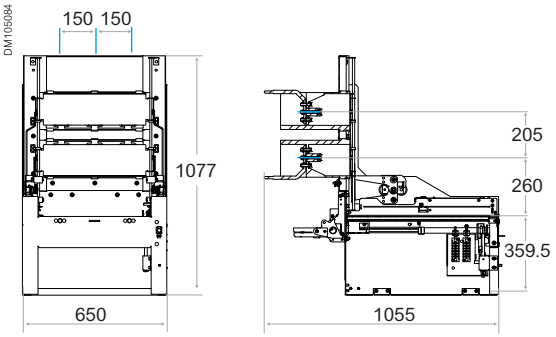

Phase distance 210 mm

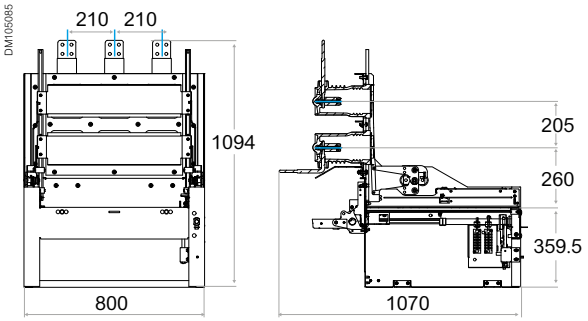

31.5 kA / Up to 1 250 A, up to 31.5 kA / 1 600 A - 2 000 A,

Phase distance 210 mm

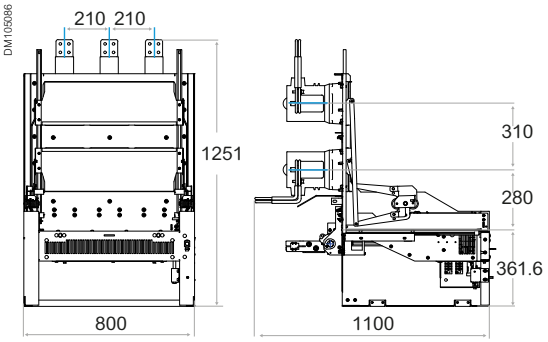

Up to 31.5 kA / 2 500 A

Phase distance 275 mm

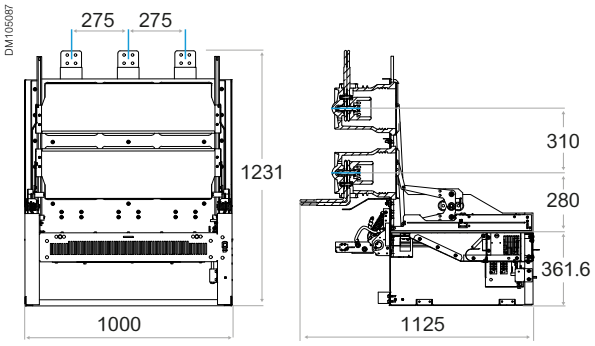

TOOLS

se.com

This international web site allows you to access all the Schneider Electric solutions and product information via:

- Comprehensive descriptions
- Range datasheets
- A download area
- Product selectors

You can also access information dedicated to your business and contact your Schneider Electric country support.

PM103687

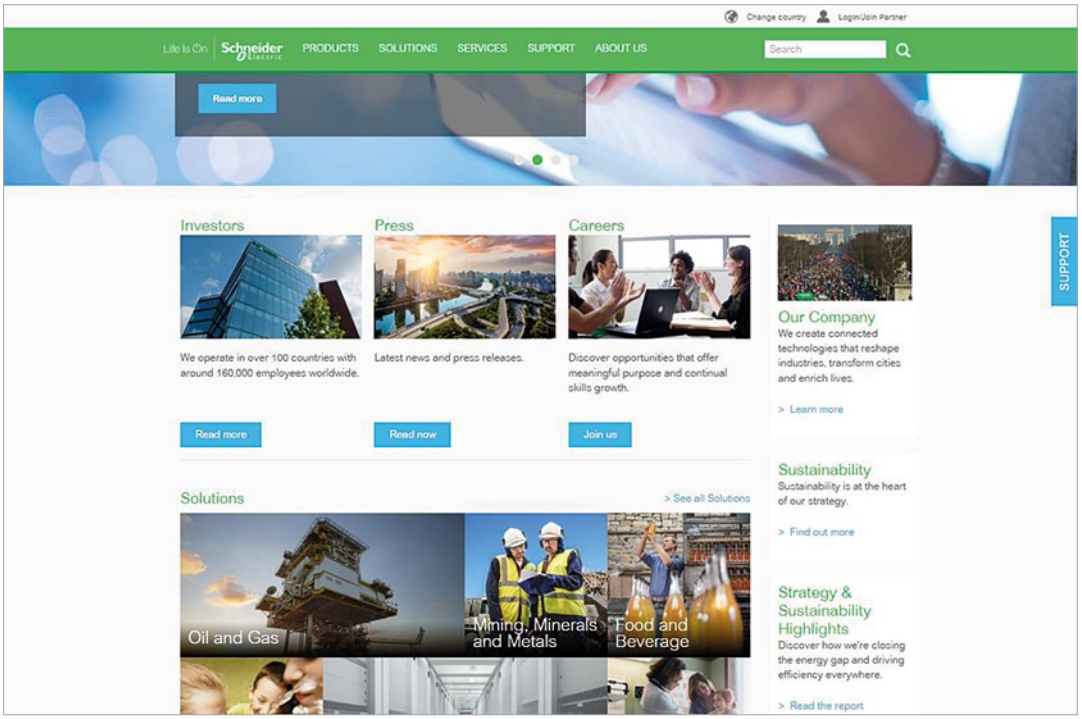

TOOLS

Web selector

This site allows you to access the Schneider Electric products in just two clicks via a comprehensive range of datasheets, with direct links to:

- Complete libraries: technical documents, catalogs, FAQs, brochures
- Selection guides from the e-catalog
- Product discovery sites and their animations

You will also find illustrated overviews, news to which you can subscribe, and a list of country contacts

Training

Training allows you to acquire the expertise (installation design, work with power on, etc.) to increase efficiency and improve customer service.

The training catalog includes beginner's courses in electrical distribution, knowledge of MV and LV switchgear, operation and maintenance of installations, and design of LV installations to give a few examples.

Notes

Life Is On | Schneider Electric

Schneider Electric Industries SAS

35, rue Joseph Monier
CS 30323
92506 Rueil Malmaison Cedex
France

RCS Nanterre 954 503 439
Capital social 896 313 776 €
www.se.com

12-2020

© 2021 - Schneider Electric. All Rights Reserved.
All trademarks are owned by Schneider Electric Industries SAS or its affiliated companies.
Document reference: NRJED316708EN

This document has been printed on recycled paper