Remotely control electric heating in apartments rented for vacation



Customer's needs

Vacation apartment rental company managers want to switch on the central heating and heat the domestic water in each apartment a short time in advance according to customer arrivals.
They also want to save money by controlling heating-related energy expenses.
In addition they want to be able to manage all these operations locally or remotely.

Recommendation

Switch on the convector heaters and heat domestic water in the apartments a few hours before the tenants arrive.
Switch off automatically with a time-delay control.
A remote control to control the convector heaters and hot-water tank for the required period from a fixed or mobile phone can be used for this.
The call is routed to the apartment phone number.

Customer advantages

- The tenants' comfort is guaranteed.
- A single telephone call switches the equipment On and Off.
- Equipment can be controlled from a GSM.
- Voice synthesis in five languages makes TRC3 easy to use.
- Access to the controls can be protected by a secret code.
- Line pick-up is compatible with telephone answering machines and fax machines.

Product advantages

- Switch-on time delay of up to 255 hours.
- Built-in electronic surge arrester.
- Mains interference protection.
- Designed to operate in most European countries.
- Local channel control.
- Two-position NO-NC output contacts.

Zoom on

TRC

Always connected for more efficient control!



TRC3



> Energy Efficiency benefits

> Energy saving thanks to a single telephone call to switch the equipment On and Off.

> Equipment can be controlled from a GSM.

> Line pick-up is compatible with telephone answering machines and fax machines.

Solution diagram

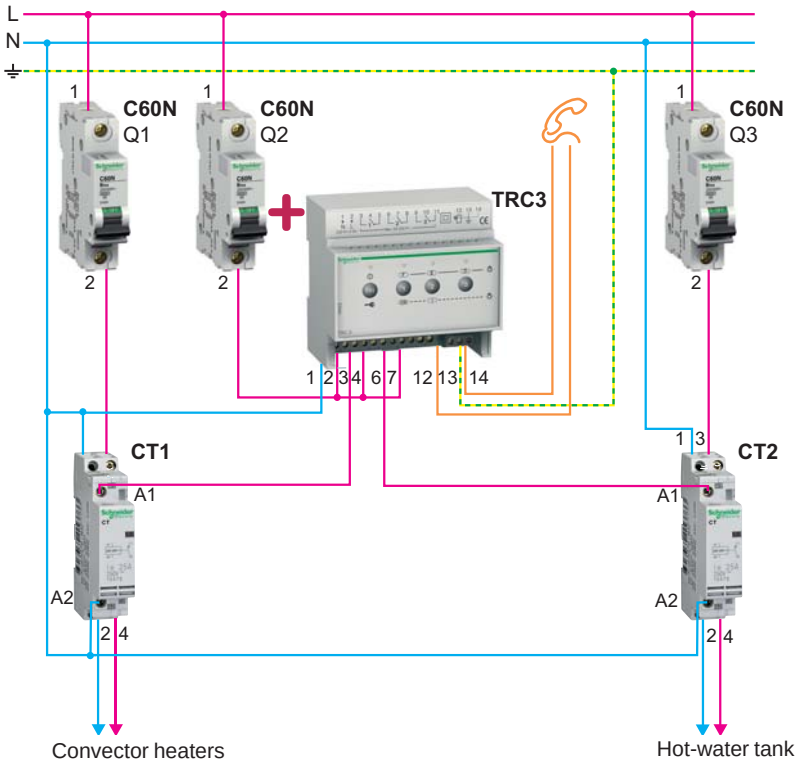

- The switch-on time-delay period (up to 255 hours) is configured during the call.
- TRC3 channel 1 controls the heating; channel 2 controls the hot-water tank.
- Built-in voice synthesis guides the user by announcing in the selected language:
  - the status of the channel contact,
  - the actions needed to switch the required channels on or off and to set the time-delay period.
- To slave the domestic hot water operation to a clock or off-peak dry contact, wire this contact in series with TRC3 contact 6-7.
- The CT2 contactor allows On or Off manual override of the hot-water tank.
- The characteristics of the protection circuit-breakers and contactors depend on the power installed.
- The earth connection is mandatory to ensure that the built-in surge arrester operates correctly.

> Products used

Product	Description	Unit	Reference
TRC3	Remote control device for switched network	1	16422
C60N (Q1 &Q3)	MCB 1 pole- 20 A	2	24177
C60N (Q2)	MCB 1 pole- 1 A	1	24170
CT	Modular contactor 2 poles- 40 A	2	15381